OPEN SPACE IMPLEMENTATION - PHASE I
MATERIALS AND PRODUCTS PALETTE

JOHNS HOPKINS
U N I V E R S I T Y
HOMEWOOD CAMPUS
BALTIMORE, MARYLAND

INDEX

Sheet	Description
1	Title Sheet
2	Project Overview
3	Overall Site Plan
4	Paving Brick
5	Paving Marble
6-9	Granite Curb, Pavers, Shoreline
10-13	Storm Drain Details
14-16	Bollards: Ped., Vehicular, Removable
17-20	Benches
21	Bike Rack
22	Hand Railing
23	Chain Link Fence
24	Steel Picket Fence
25	Emergency Call Box
26	Pier Mounted Fixture
27-28	Pathway Light - Post, Fixture
29	Trash Receptacle
30	Tree Pit
31	Stairs: Marble, Brick
32	Krieger Court
33	JHU Sign Wall At Charles Street
34	Aggregate Walk

January 2004

Client: Offices of Facilities & Real Estate
Johns Hopkins University
Greenhouse / 3400 N. Charles St.
Baltimore, Maryland 21218-2690

Donor Rep.: Kolkowitz and Kusske
Architecture, Landscape Architecture
12 Crest Road
Rowayton, CT 06853

Design Team:

RUMMEL, KLEPPER & KAHL, LLP — *Consulting Engineers*
CARE OF TREES — *Tree Specialist*
AYERS SAINT GROSS — *Architects & Campus Planners*
JMT — *Surveyors*
MAHAN RYKIEL ASSOCIATES INC. — *Landscape Architects*
CLINE, BETTRIDGE, BERNSTEIN — *Lighting Consultant*
MICHAEL VERGASON — *Landscape Architects*
LYNCH & ASSOCIATES — *Irrigation Consultant*

Construction Manager:
HENRY H. LEWIS

Open Space Master Plan

Many visitors to Homewood are pleasantly surprised. They do not expect flowering trees, quiet gardens, wide open green spaces and Georgian architecture on an urban campus.

Those are their first impressions.

Then they notice the 18-wheelers competing with pedestrians for access to Levering Hall. Service trucks pulled up on sidewalks. A "temporary" building that has stood almost since World War II. A road network that defines the concept, "You can't get there from here."

With a new student arts center nearing completion and the Whitaker Biomedical Engineering Institute's Clark Hall up next, to be followed by a Hodson Trust-funded classroom building, a student recreation center, a nuclear magnetic resonance facility and lots more down the road, the problems are only going to get harder to fix.

That's why President William R. Brody, the university administration and the Homewood deans chose to commission a new Homewood campus master plan in 1999. Change and growth are inevitable, they reasoned, and, if handled well, can result in a campus that's not only larger but more attractive and more human as well.

The university engaged Ayers/Saint/Gross, a Baltimore-based architecture firm., to lead a year-long planning process. This effort involved discussions and consultation with literally hundreds of Hopkins people --from the president to members of the incoming class of 2003 --and with representatives of the university's neighbor communities.

Anonymous Donor

An anonymous donor is backing an ambitious effort to make the Open Space Plan happen sooner rather than later, now rather than a decade from now. In 180 days, from just after commencement in May 2000 to Christmas 2000, construction crews swarmed over the upper and lower quads and the plaza in front of the AMRs. By August 2001, work was completed on an area of campus covering about 24 acres, from University Parkway south to Shriver Hall, and from the AMRs west to Decker Garden and the Bloomberg Center.

The donor, President William R. Brody said, "has put his resources on the table and challenged us to transform Homewood into the finest urban campus in the nation."
During the drafting of the new campus master plan over the past year, a consensus formed that, as impressive as it is, Homewood's overall appearance and ambience are not yet equal to the university's stature.

"The concept of a serene, pedestrian-friendly campus with a signature design and a beauty all its own, caught the imagination of our donor just as it did that of the campus community," Brody said. "We owe him an enormous debt of gratitude for giving us a chance to put this part of the plan on such a fast track. Otherwise, it might have taken years to complete."

Design Team (February 2000 Through August 2001)

This dramatic make over in a short period of time has been a challenge. However, the design team has put their best effort to make this project reality. The design team members engaged by JHU and managed by RK&K include:

Lead Consultant, Civil Site & Design Engineers:	Rummel, Klepper & Kahl, LLP, Baltimore
Construction Managers:	Henry Lewis Contractors Inc., Owings Mills
Architects/Master Planners:	Ayers/Saint/Gross, Baltimore
Landscape Architects: (Concepts and Final Design)	Michael Vergason, Arlington, Va.
Landscape Architects: (Final Design)	Mahan Rykiel Associates Inc., Baltimore
Donor's Representative:	Kolkowitz Kusske, Norwalk, Conn.
Tree Preservation:	Care of Trees Inc., Herndon, Va.
Irrigation:	Lynch & Associates, Beltsville, Md.
Surveyors:	JMT, Baltimore
Speciality Lighting:	Cline Bettridge Bernstein Lighting Design, New York

Great Excavations Construction (May 2000 Through August 2001)

Asphalt uprooted. Brick walkways laid down in place of roads. Most cars and trucks diverted from the core of campus. Newly landscaped quads, with consistent lighting fixtures and benches. Building and directional signs where past visitors have faced the moral equivalent of a maze.

Bricks--more than 1 million, plus marble and granite accent stones--were ordered and many have already been shipped to campus. Expert bricklayers and other skilled workers were recruited from as far away as southern Pennsylvania and northern Virginia. Plans were being drawn up for installation of several hundred trees and shrubs, and for quiet areas for contemplation and discussion.

The Great Excavations construction blitz is the first step in completion of the master plan. The plan is expected to guide development and building location at Homewood for decades.

Materials and Products Palette

This booklet was prepared by RK&K Engineers to document design and construction decisions and details. It contains site details, photographs and written information on manufacturers & finish specifications for the materials and products installed during the Great Excavations Construction. It is intended to be used as reference material for the continuing implementation of the master plan.

Source: JHUHomewood Great Excavations Website, 2000.

JOHNS HOPKINS UNIVERSITY
HOMEWOOD CAMPUS
BALTIMORE, MARYLAND

RUMMEL, KLEPPER & KAHL, LLP
Consulting Engineers

AYERS SAINT GROSS
Architects & Campus Planners

MAHAN RYKIEL ASSOCIATES INC.
Landscape Architects

MICHAEL VERGASON
Landscape Architects

Revisions

JHU: OPEN SPACE IMPLEMENTATION - PHASE I

OVERALL SITE PLAN

August 2001

Sheet **3** of 34

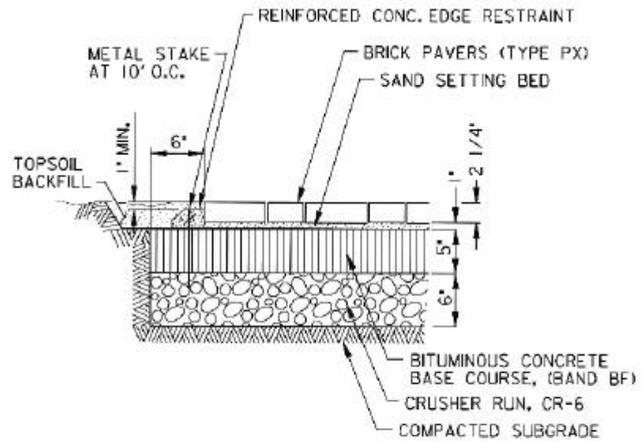

BRICK PAVER EDGING SECTION
(VEHICULAR)
(NTS)

PAVING BRICK- VEHICULAR

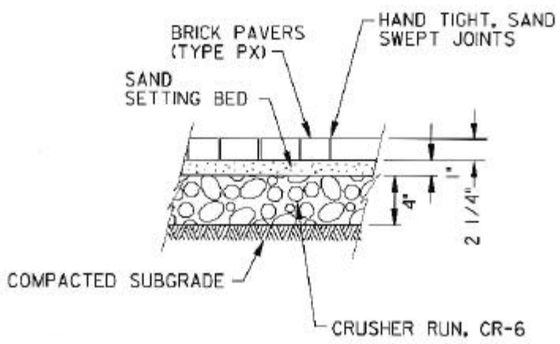

BRICK AND SPECIAL PLAZA
PAVEMENT (PEDESTRIAN)
(NTS)

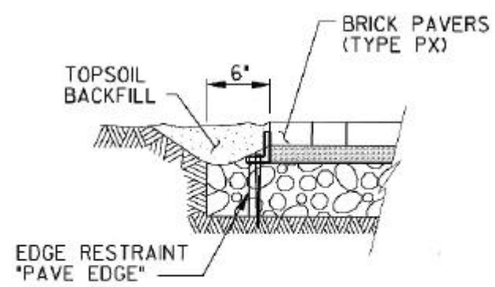

PAVER EDGING
SECTION (PEDESTRIAN)
(NTS)

PAVING BRICK- PEDESTRIAN

MANUFACTURER: PINE HALL BRICK

MODEL NAME: PATHWAY FULL RANGE

FINISH SPECIFICATIONS: HEAVY VEHICULAR PAVING BRICK, TYPE R, ASTM C 1272, APPLICATION PX

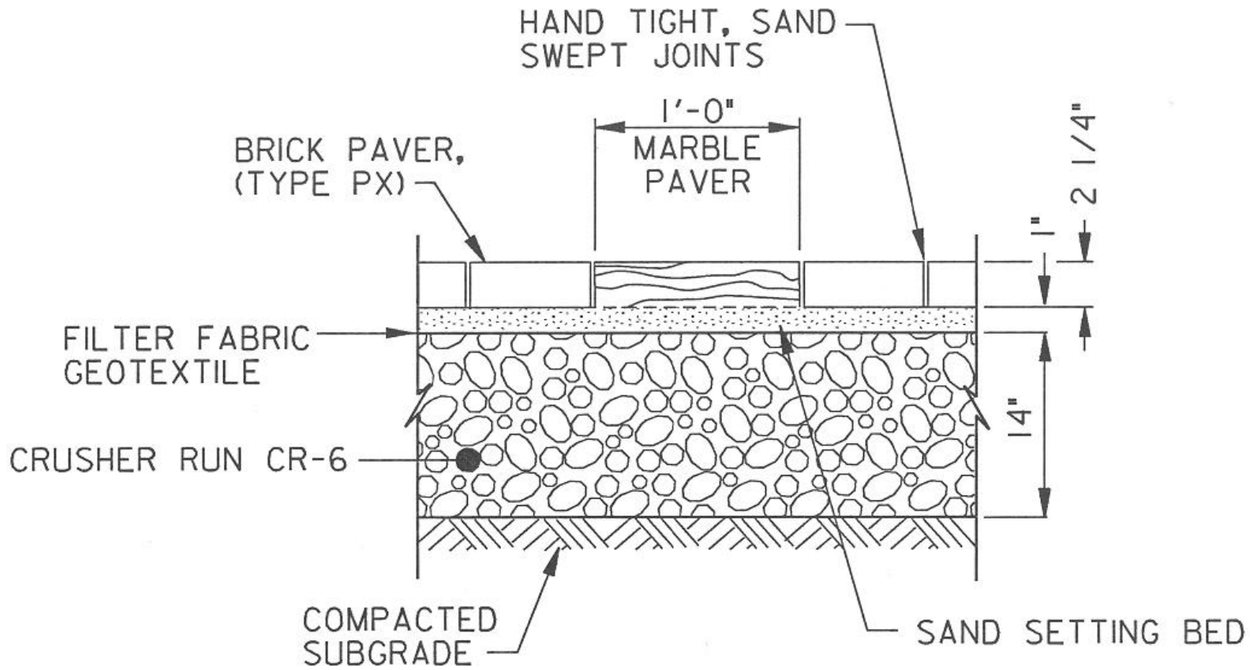

BRICK PAVEMENT WITH
MARBLE BANDS (VEHICULAR)
(NTS)

PAVING MARBLE

PAVING MARBLE

MANUFACTURER: GAWET MARBLE & GRANITE, INC.

MODEL NAME: DANBY GREY

FINISH SPECIFICATIONS: EXTERIOR HONED (EXPOSED SURFACE ONLY)

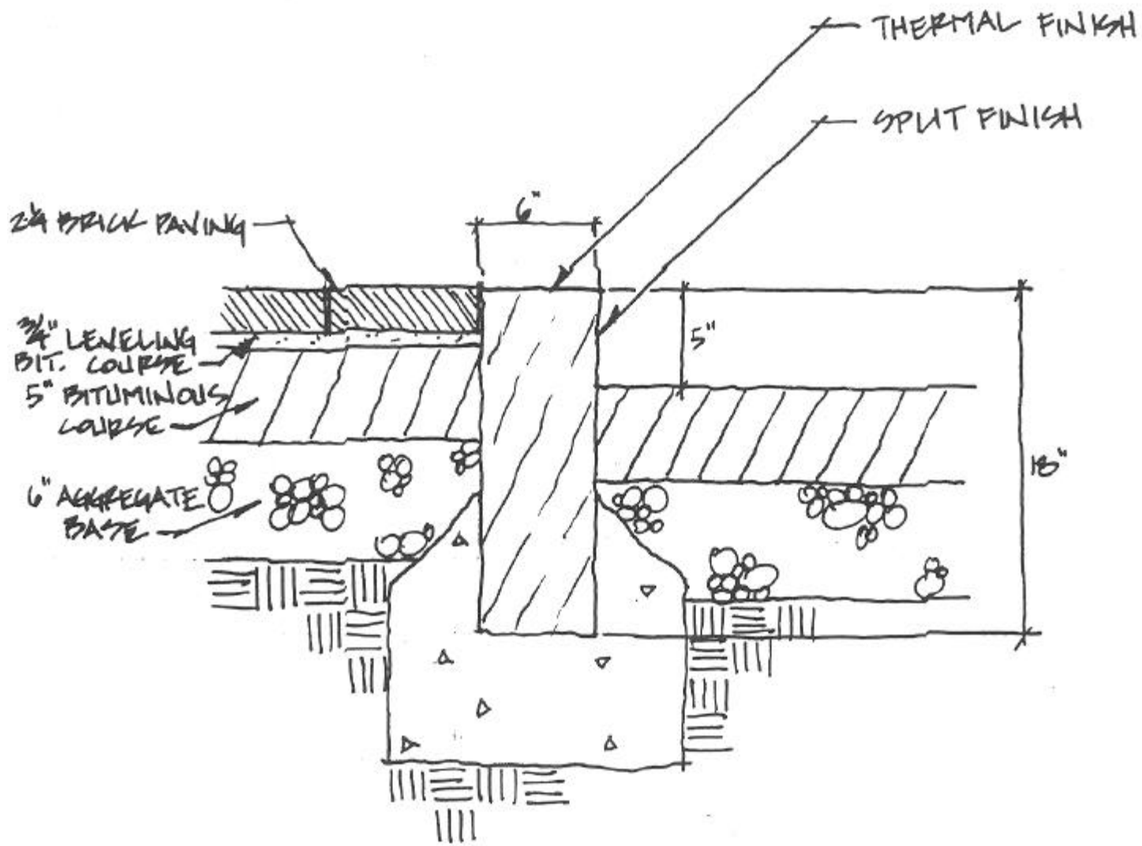

6' STRAIGHT GRANITE CURB @ UNIVERSITY ENTRY

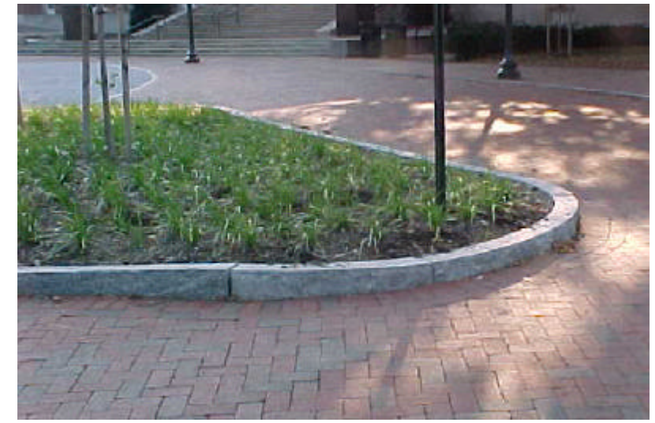

GRANITE CURB

GRANITE CURB

MANUFACTURER: NEW ENGLAND STONE, INC.

MODEL NAME: WOODBURY S

FINISH SPECIFICATIONS: THERMAL TOP, SPLIT FACE, SAWN SIDES & BOTTOM

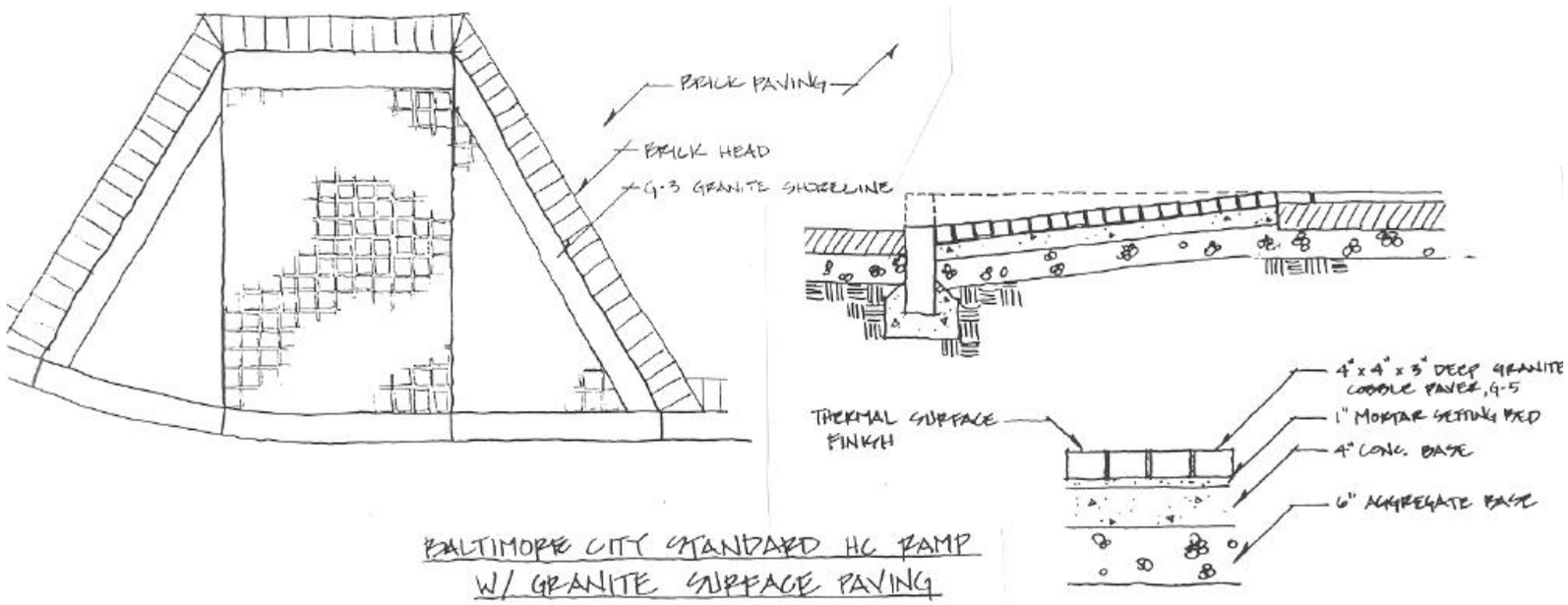

BALTIMORE CITY STANDARD HC RAMP W/ GRANITE SURFACE PAVING

GRANITE HC RAMP PAVERS

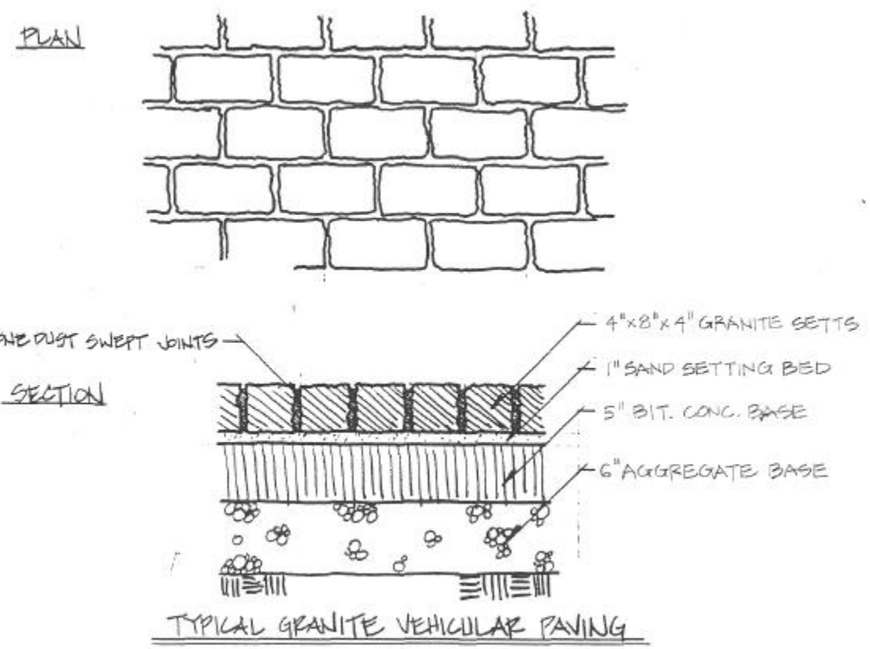

TYPICAL GRANITE VEHICULAR PAVING

GRANITE VEHICULAR PAVERS

MANUFACTURER: NEW ENGLAND STONE, INC.

MODEL NAME: WOODBURY S

FINISH SPECIFICATIONS: HC RAMP: THERMAL TOP, SAWN SIDES & BOTTOM
VEHICULAR: 5 SIDES SPLIT FACE, SAWN BOTTOM

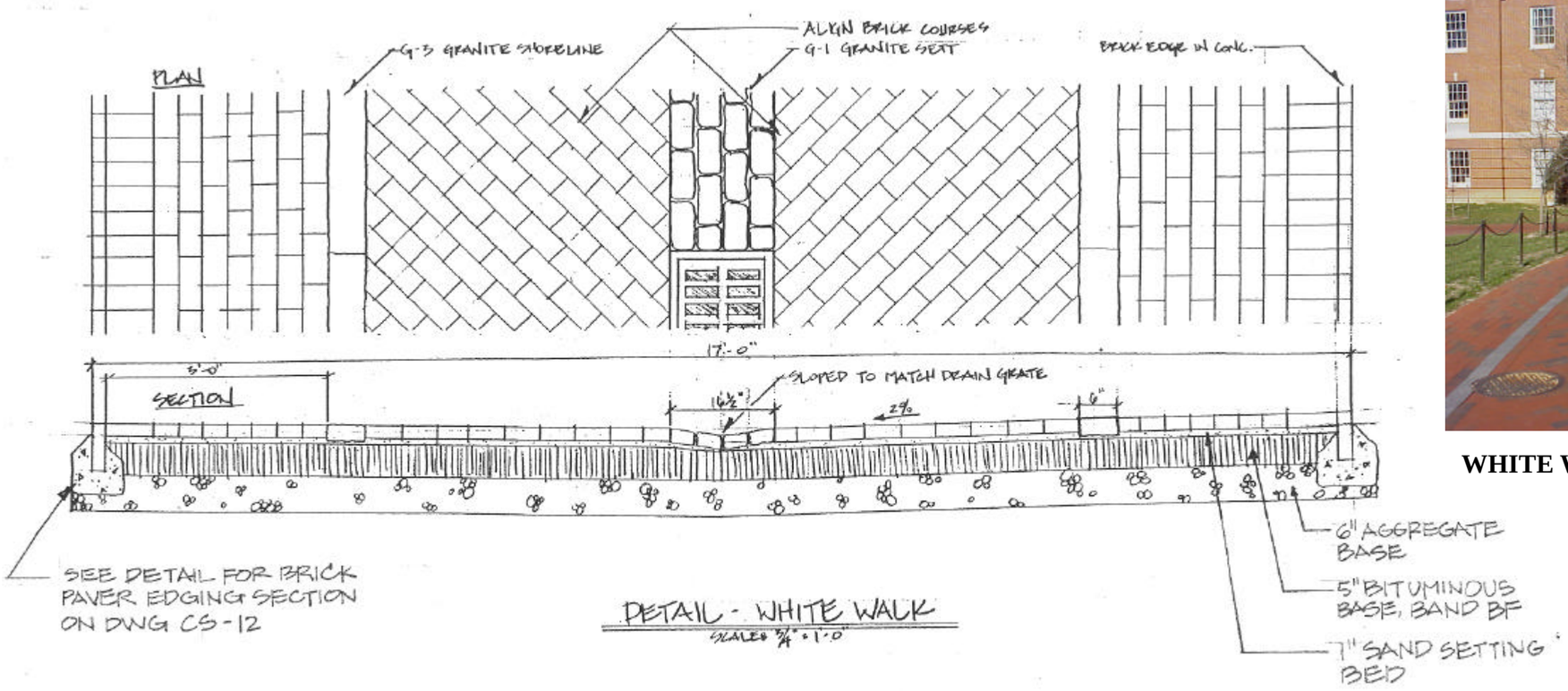

WHITE WALK PAVERS

JOHNS HOPKINS UNIVERSITY
HOMEWOOD CAMPUS BALTIMORE, MARYLAND

RUMMEL, KLEPPER & KAHL, LLP
Consulting Engineers

AYERS SAINT GROSS
Architects & Campus Planners

MAHAN RYKIEL ASSOCIATES INC.
Landscape Architects

MICHAEL VERGASON
Landscape Architects

Revisions

JHU: OPEN SPACE IMPLEMENTATION - PHASE I

WHITE WALK

August 2001

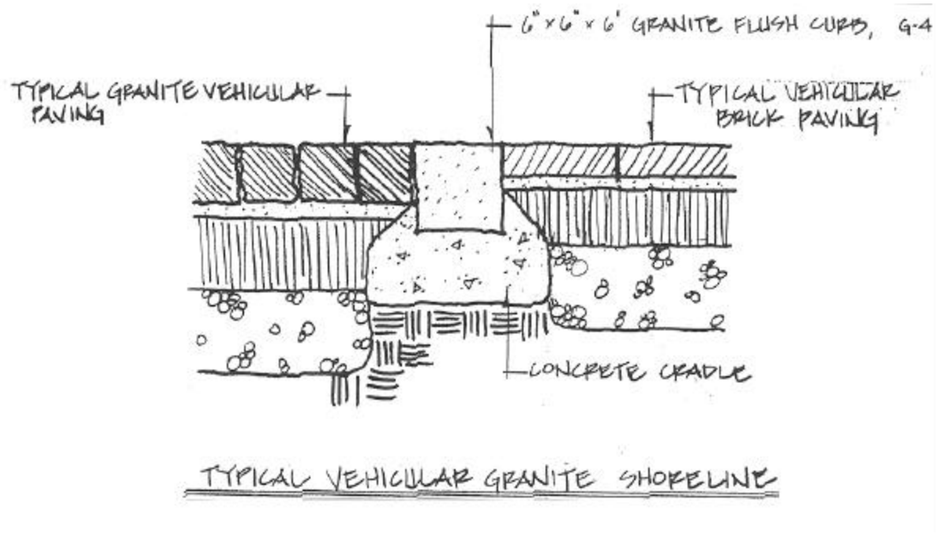

GRANITE SHORELINE

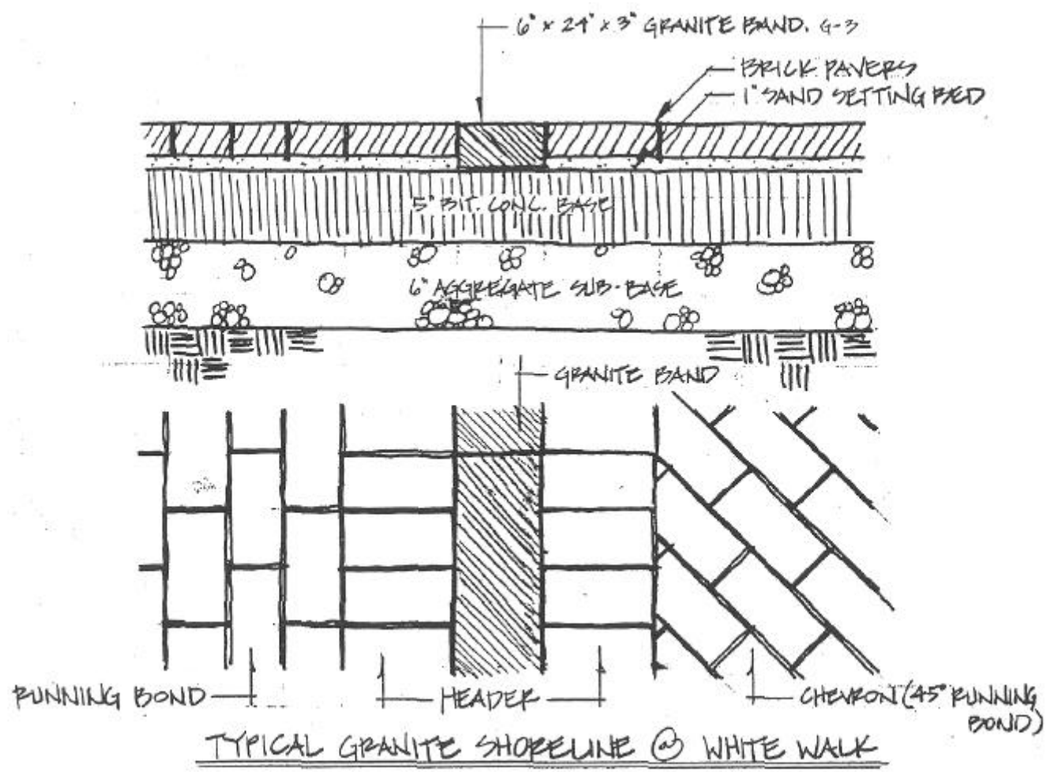

GRANITE SHORELINE: WHITE WALK

MANUFACTURER: NEW ENGLAND STONE, INC.

MODEL NAME: WOODBURY S

FINISH SPECIFICATIONS: THERMAL TOP,
SAWN SIDES & BOTTOM

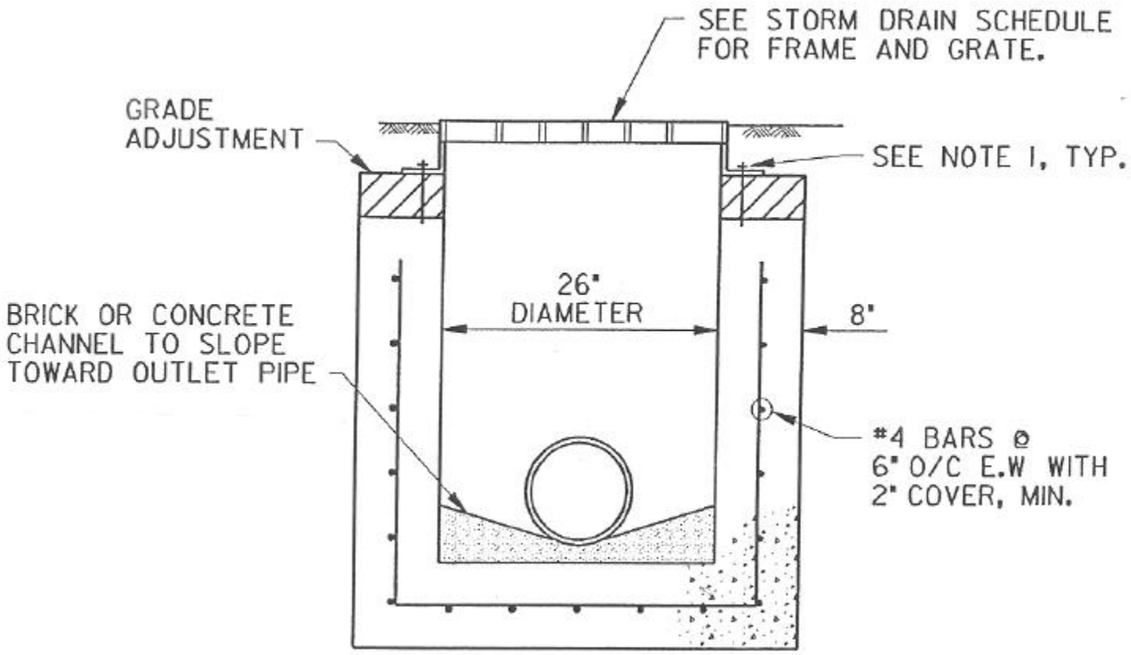

TYPE 'C' YARD INLET DETAIL
NTS

NOTES:

1. SEE MSHA STANDARDS FOR FRAME ANCHORAGE DETAIL (MD - 374.02).
2. INLET SHALL BE CONSTRUCTED OF REINFORCED CONCRETE (MSHA STD. MIX NO. 2)
3. SIZE, TYPE AND DIRECTION OF OUTLET PIPE VARIES.
4. PROVIDE PRECAST MANHOLE FOR YARD INLETS THAT ARE GREATER THAN 5 FEET (MSHA STD. MD - 384.01, 24" MAXIMUM OULET PIPE). ADJUST ECCENTRIC CONE UNIT TO MATCH DIAMETER OF FRAME AND COVER.

YARD INLET FRAME & GRATE

MANUFACTURER (FRAME & GRATE): EAST JORDAN IRON WORKS
MODEL / PART NO: MHR-706 (24" DIAMETER)

FINISH SPECIFICATIONS: RADIAL GRATE, PAINT BLACK OR MATCH PAINT CHIP FROM JHU PAINT SHOP (RAL-7022 UMBRAGREY)

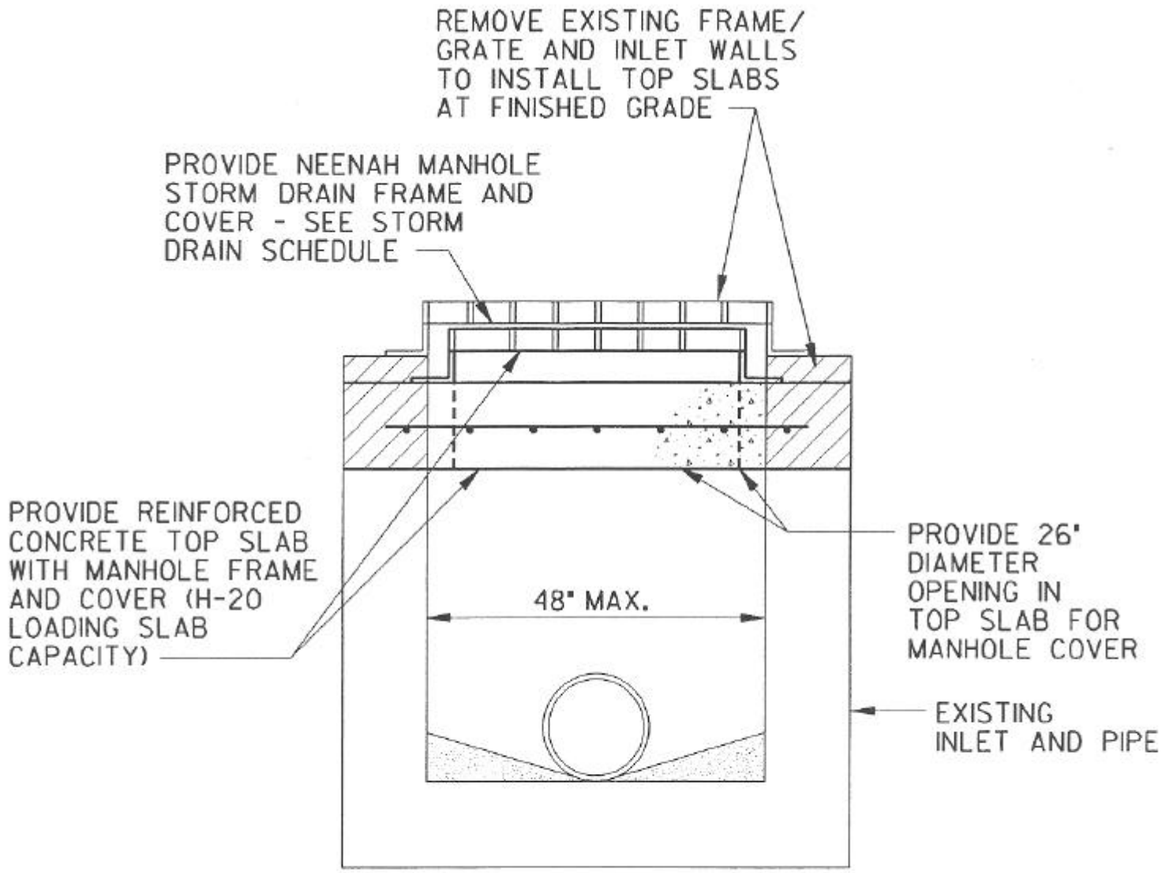

TYPE 'D':
INLET TO MANHOLE CONVERSION DETAIL
NTS

MANHOLE FRAME & COVER

MANUFACTURER (FRAME & COVER): EAST JORDAN IRON WORKS
MODEL / PART NO: MHR-706 (24" DIAMETER)

FINISH SPECIFICATIONS: PERFORATED COVER
PAINT BLACK OR MATCH PAINT CHIP FROM JHU PAINT SHOP (RAL-7022 UMBRA GREY)

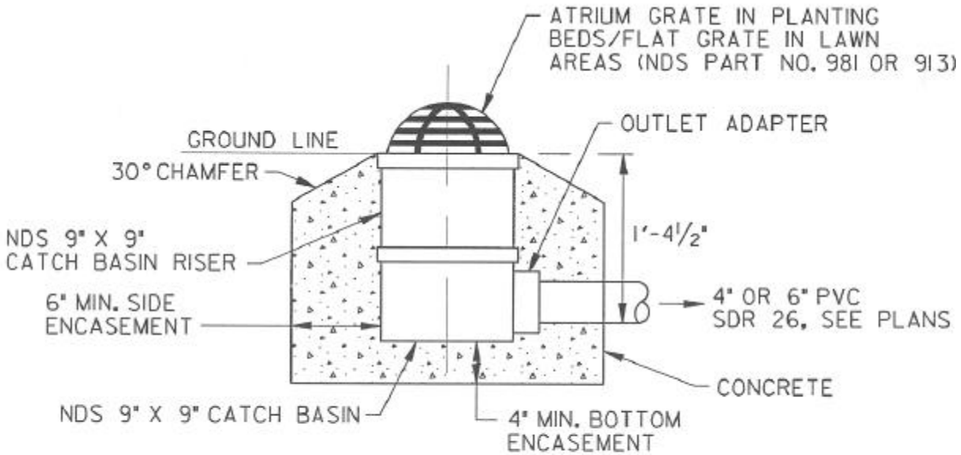

TYPICAL LANDSCAPE AREA DRAIN
(NTS)

PLANTING BED AREA DRAIN

MANUFACTURER (FRAME & GRATE): NDS

MODEL / PART NO: 981 (9" SQUARE,ATRIUMGRATE)

FINISH SPECIFICATIONS: BLACK (PLASTIC)

LAWN AREA DRAIN

MANUFACTURER (FRAME & GRATE): NDS

MODEL / PART NO: 913 (9" SQUARE, FLAT GRATE)

FINISH SPECIFICATIONS: BLACK (CAST IRON)

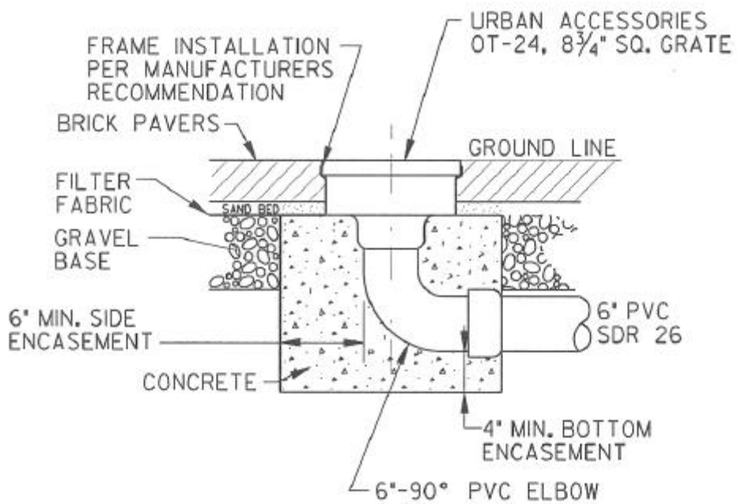

TYPICAL PAVED AREA DRAIN
(NTS)

PAVED AREA DRAIN

MANUFACTURER
(FRAME & GRATE): URBAN ACCESSORIES

MODEL / PART NO: GRID (8-1/2" SQUARE)

FINISH SPECIFICATIONS: PAINT TO MATCH PAINT CHIP FROM JHU PAINT SHOP (RAL-7022 UMBRA GREY)

PAVED AREA DRAIN

MANUFACTURER
(FRAME & GRATE): URBAN ACCESSORIES

MODEL / PART NO: OT-24 (8-3/4" SQUARE)

FINISH SPECIFICATIONS: PAINT TO MATCH PAINT CHIP FROM JHU PAINT SHOP (RAL-7022 UMBRAGREY)

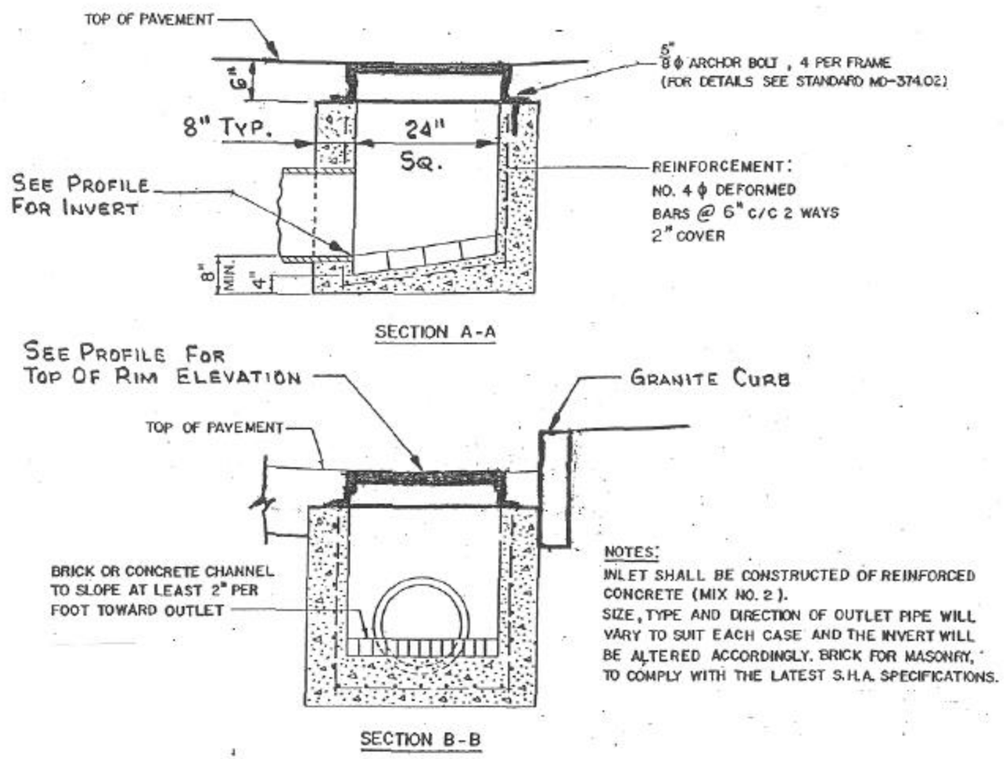

TYPE 'L' : TYPICAL ROADWAY DRAIN

ROADWAY DRAIN FRAME & GRATE

MANUFACTURER (FRAME & GRATE): EAST JORDAN IRON WORKS

MODEL / PART NO: 5250 (24" SQUARE)

FINISH SPECIFICATIONS: PAINT BLACK OR MATCH PAINT CHIP FROM JHU PAINT SHOP (RAL-7022 UMBRA GREY)

BOLLARD SPECIFICATIONS

STYLE:	PRINCETON MODIFIED REMOVABLE
HEIGHT:	42"
BASE:	△ 13" SQUARE ALUMINUM PLATE
MATERIAL:	CAST ALUMINUM
FINISH:	PRIME PAINT THEN FINISH PAINT,
ACCESS DOOR:	NOT REQUIRED
ANCHOR BOLTS:	(4) 3/4" DIA. X 24" LONG + 3" HOOK (FULLY GALVANIZED WITH 1 GALVANIZED NUT AND 1 GALVANIZED WASHER PER BOLT)
BOLT PROJECTION:	3" REQUIRED

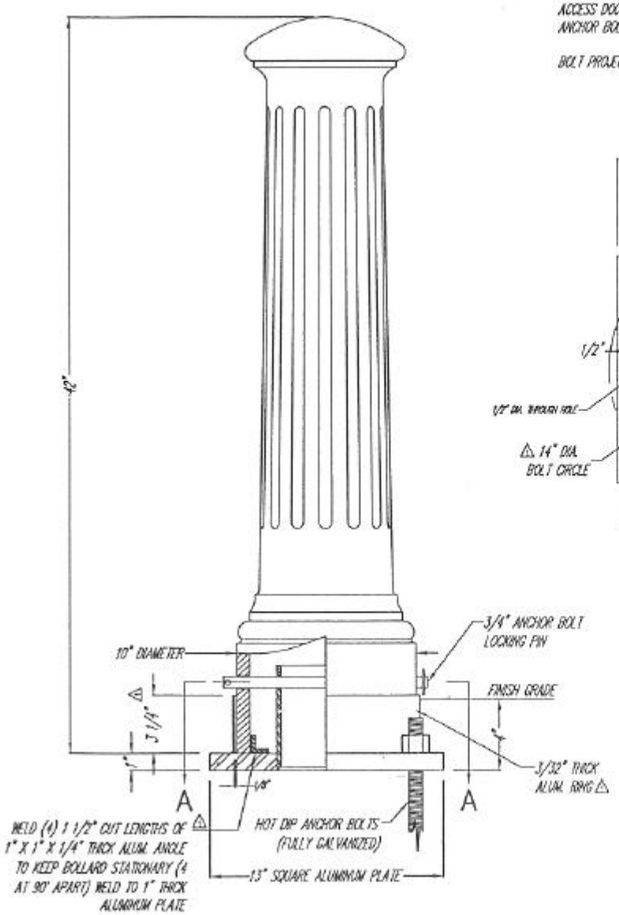

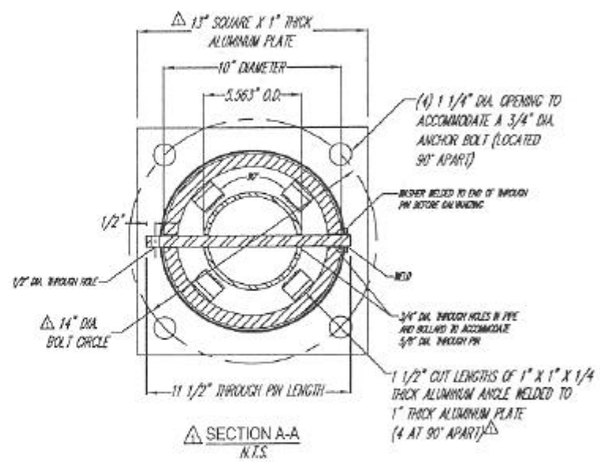

REMOVABLE BOLLARD

MANUFACTURER: SPRING CITY ELECTRICAL MANUFACTURING CO.

MODEL NAME: PRINCETON MODIFIED, DWG BOL-24625

FINISH SPECIFICATIONS: PAINT TO MATCH PAINT CHIP FROM JHU PAINT SHOP (RAL-7022 UMBRAGREY)

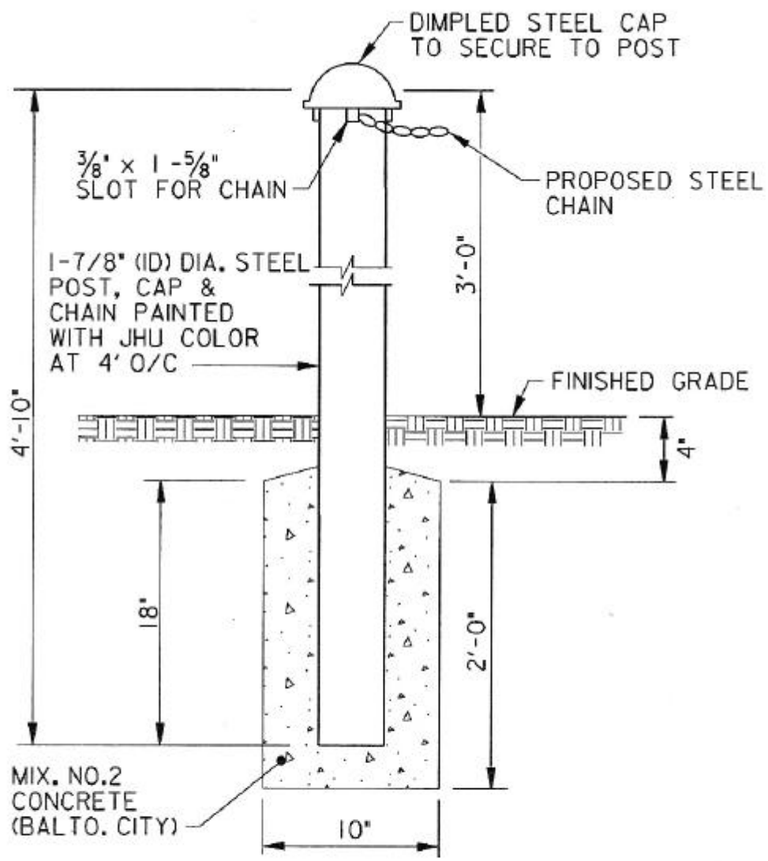

PEDESTRIAN BOLLARD DETAIL
(NTS)

PEDESTRIAN BOLLARD

Note: This "non-standard" detail was proposed by Henry H. Lewis and resulted in a significant cost savings.

MANUFACTURER: FENCE MASTERS

FINISH SPECIFICATIONS: GALVANIZED, DOME STYLE POST CAP, PRIMERED POST, PAINT TO MATCH PAINT CHIP FROM JHU PAINT SHOP (RAL-7022 UMBRAGREY)

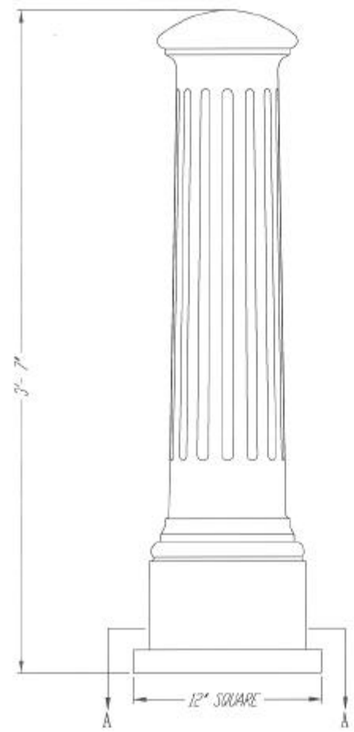

BOLLARD SPECIFICATIONS

STYLE:	PRINCETON (EXT. A.B.)
HEIGHT:	3'-7"
BASE:	12" SQUARE
MATERIAL:	1 PIECE, HEAVY WALL CAST IRON PER A.S.T.M. A48-83 CLASS 30
FINISH:	PRIME PAINT THEN FINISH PAINT
ACCESS DOOR:	NOT REQUIRED
ANCHOR BOLTS:	(4) 3/4" X 24" + 3" HOOK (FULLY GALVANIZED WITH 1 GALVANIZED NUT AND 1 GALVANIZED WASHER PER BOLT)
BOLT PROJECTION:	3" REQUIRED

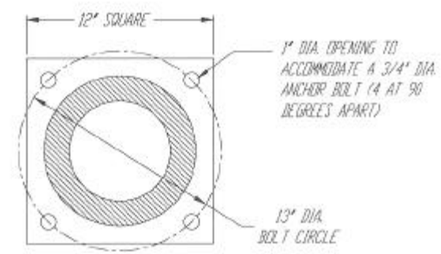

SECTION A-A
N.T.S.

MANUFACTURER: SPRING CITY ELECTRICAL MANUFACTURING CO.

MODEL NAME: PRINCETON MODIFIED(EXT.A.B.), DWG BOL-24624

FINISH SPECIFICATIONS: PAINT TO MATCH PAINT CHIP FROM JHU PAINT SHOP (RAL-7022 UMBRAGREY)

NOTE: BOLLARD NOT INSTALLED IN PHASE I

JOHNS HOPKINS UNIVERSITY
HOMEWOODCAMPUS BALTIMORE,MARYLAND

RUMMEL, KLEPPER & KAHL, LLP
ConsultingEngineers

AYERS SAINT GROSS
Architects&CampusPlanners

MAHAN RYKIEL ASSOCIATESINC.
Landscape Architects

MICHAEL VERGASON
Landscape Architects

Revisions

JHU: OPEN SPACE IMPLEMENTATION - PHASE I

VEHICULAR BOLLARD

August 2001

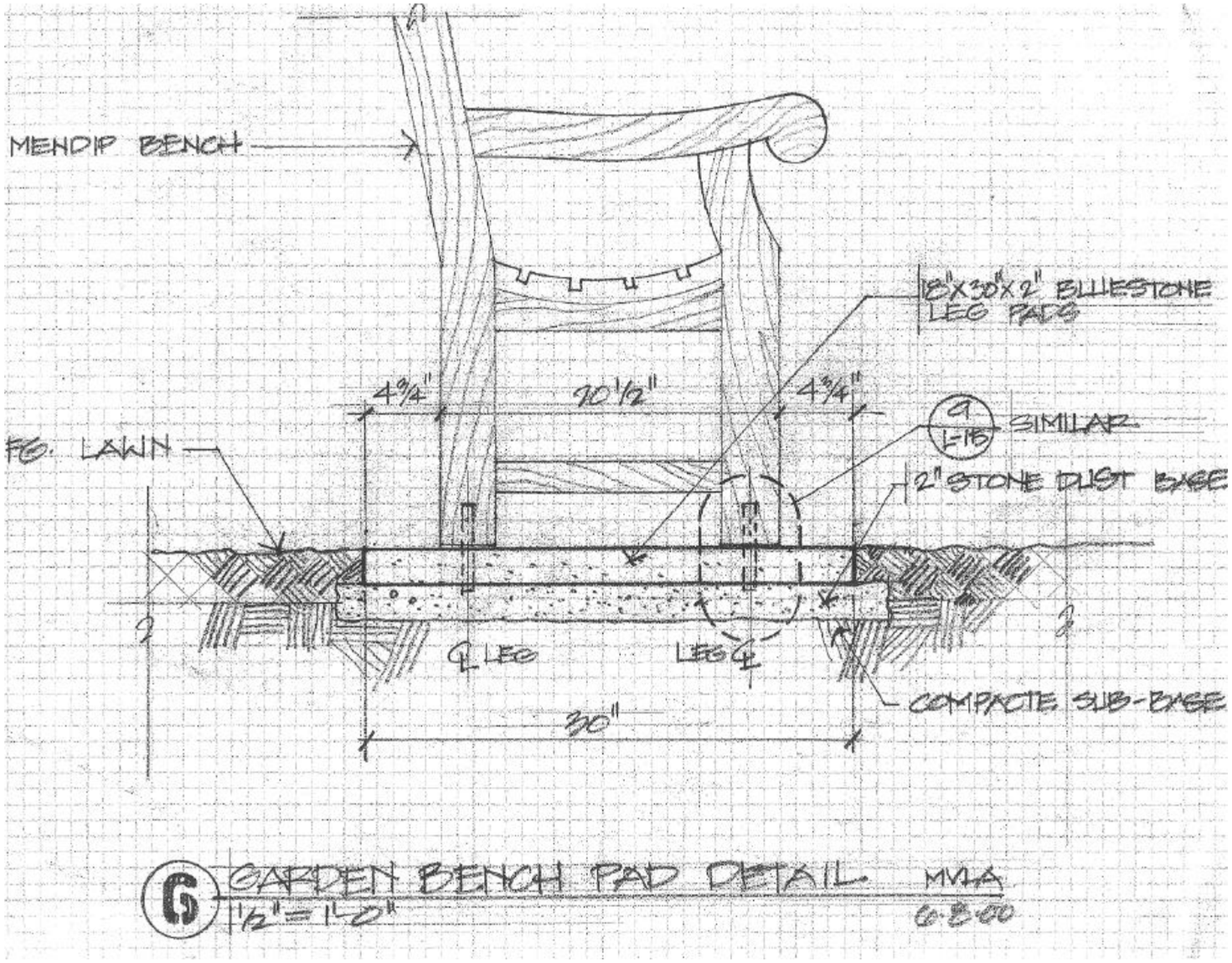

INFORMAL / GARDEN BENCH

MANUFACTURER: COUNTRY CASUALS

MODEL NAME: MENDIP

FINISH SPECIFICATIONS: TEAK WOOD

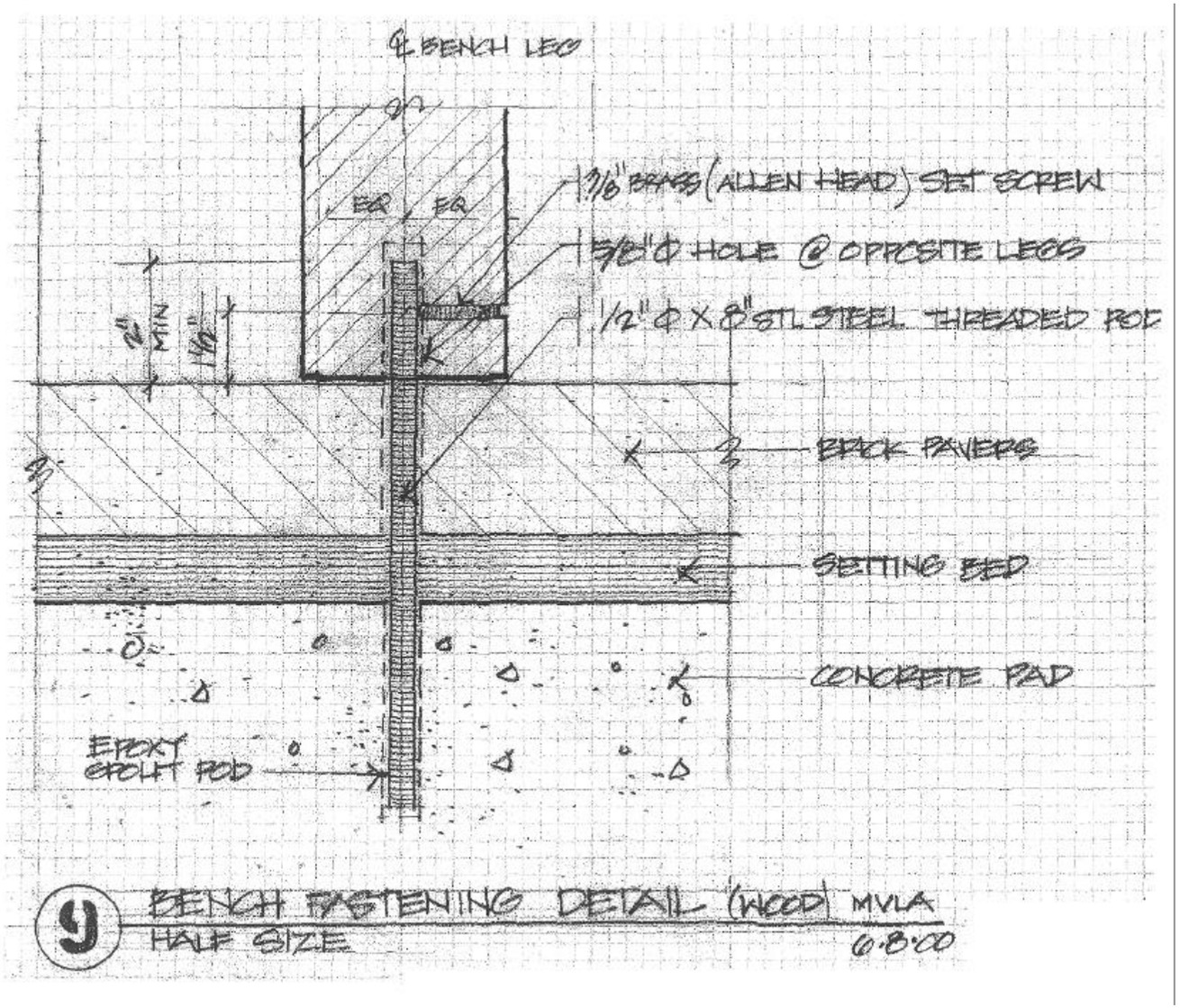

BENCH FASTENING

MANUFACTURER: COUNTRY CASUALS

MODEL NAME: MENDIP

FINISH SPECIFICATIONS: TEAK WOOD

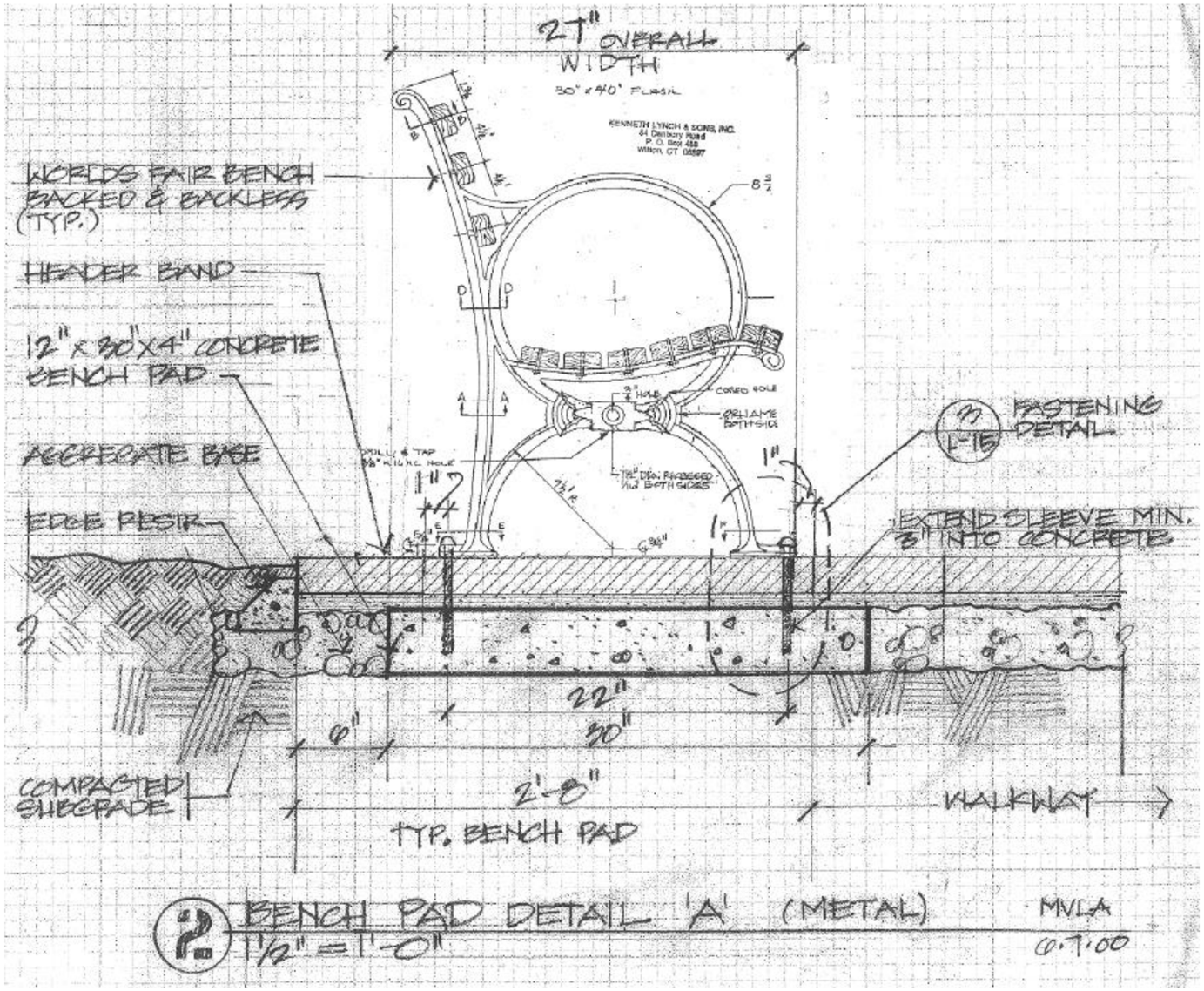

FORMAL BENCH

MANUFACTURER: KENNETH LYNCH & SONS

MODEL NAME: WORLD'S FAIR / 6736 (WITHOUT BACK)
WORLD'S FAIR / 6737 (WITH BACK)

FINISH SPECIFICATIONS: CAST IRON ENDS PAINTED TO MATCH PAINT CHIP FROM JHU PAINT SHOP (RAL-7022 UMBRAGREY)
IPE BENCH SURFACE

JOHNS HOPKINS UNIVERSITY HOMEWOODCAMPUS BALTIMORE,MARYLAND

RUMMEL, KLEPPER & KAHL, LLP ConsultingEngineers

AYERS SAINT GROSS Architects&CampusPlanners

MAHAN RYKIEL ASSOCIATESINC. Landscape Architects

MICHAEL VERGASON Landscape Architects

Revisions

JHU: OPEN SPACE IMPLEMENTATION - PHASE I

FORMAL BENCH

August 2001

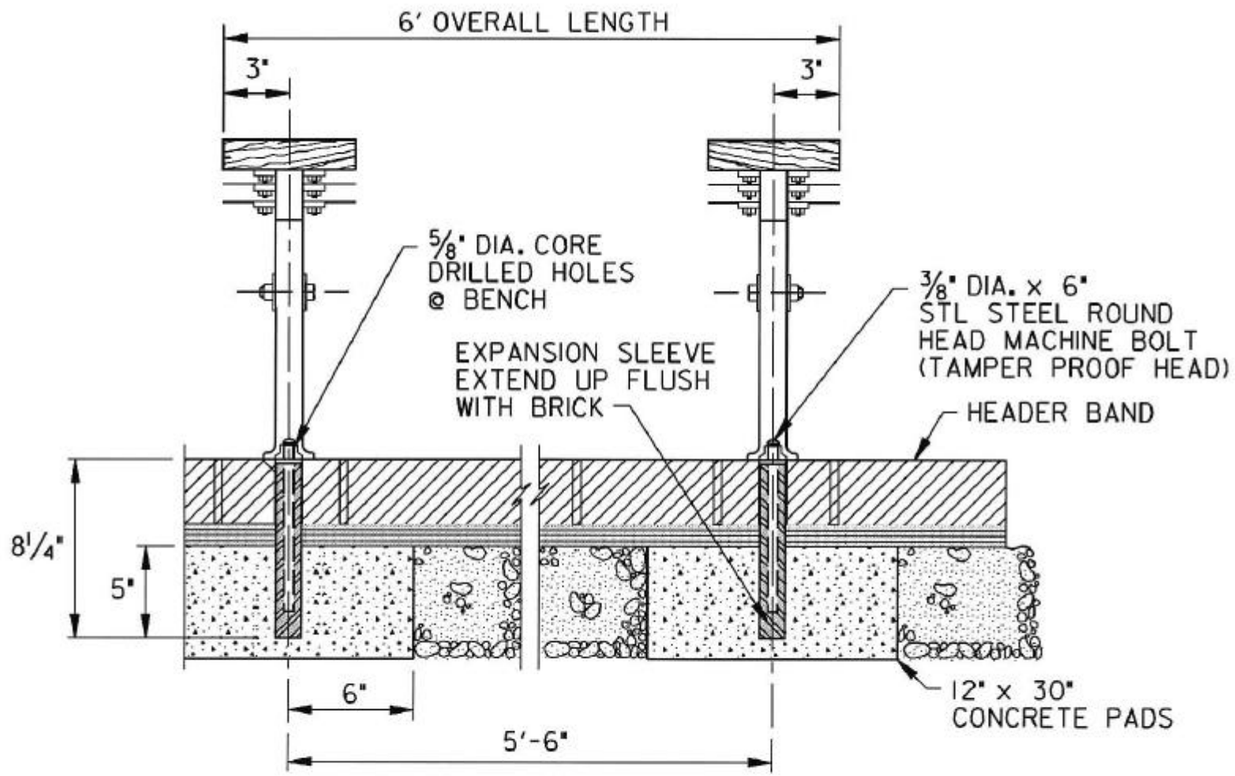

BENCH FASTENING DETAIL
(NTS)

BENCH FASTENING

MANUFACTURER: KENNETH LYNCH & SONS

MODEL NAME: WORLD'S FAIR / 6736 (WITHOUT BACK)
WORLD'S FAIR / 6737 (WITH BACK)

FINISH SPECIFICATIONS: CAST IRON ENDS PAINTED TO MATCH PAINT CHIP FROM JHU PAINT SHOP (RAL-7022 UMBRA GREY)
IPE BENCH SURFACE

JOHNS HOPKINS UNIVERSITY HOMEWOOD CAMPUS BALTIMORE, MARYLAND

RUMMEL, KLEPPER & KAHL, LLP Consulting Engineers

AYERS SAINT GROSS Architects & Campus Planners

MAHAN RYKIEL ASSOCIATES INC. Landscape Architects

MICHAEL VERGASON Landscape Architects

Revisions

JHU: OPEN SPACE IMPLEMENTATION - PHASE I

FORMAL BENCH FASTENING

August 2001

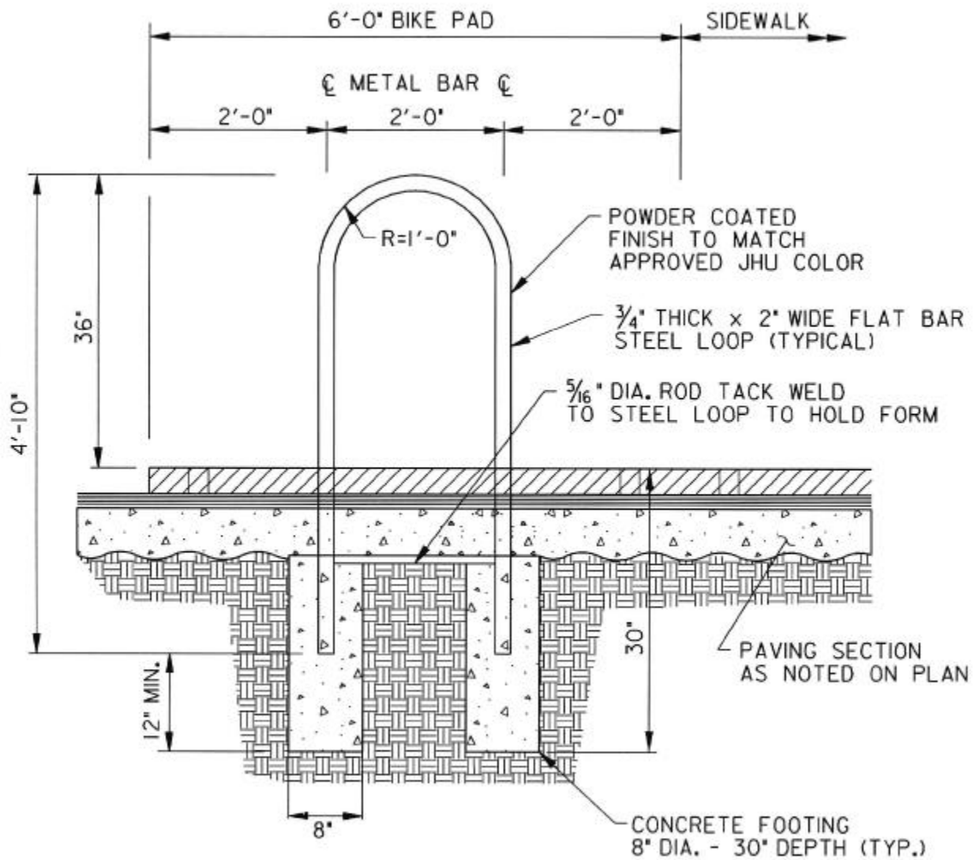

BIKE PAD SECTION
(NTS)

BIKE RACK

MANUFACTURER: HUBER WELDING SERVICE

FINISH SPECIFICATIONS: 1 SHOP COAT RED OXIDE PRIMER
PAINT TO MATCH PAINT CHIP
FROM JHU PAINT SHOP
(RAL-7022 UMBRAGREY)

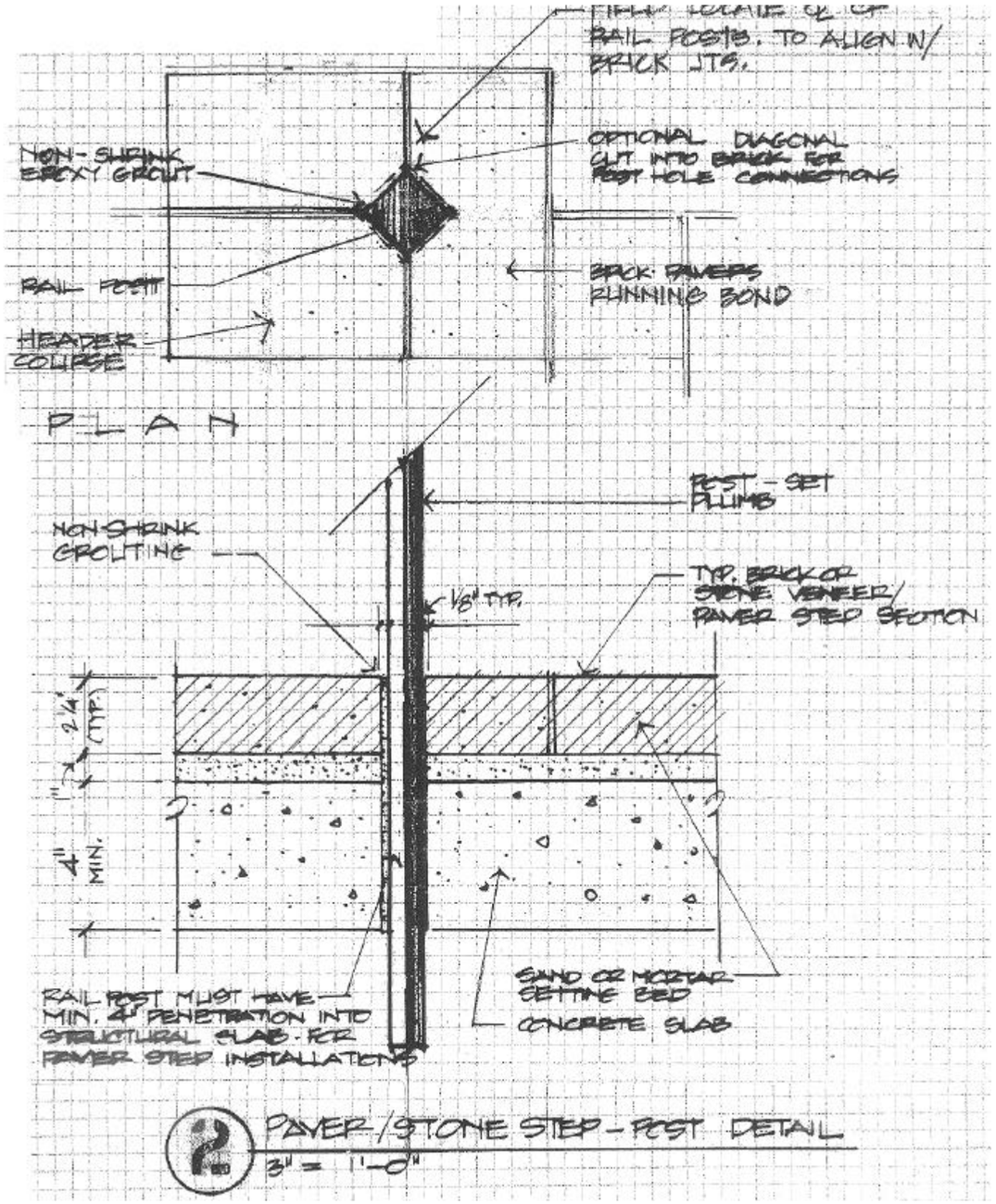

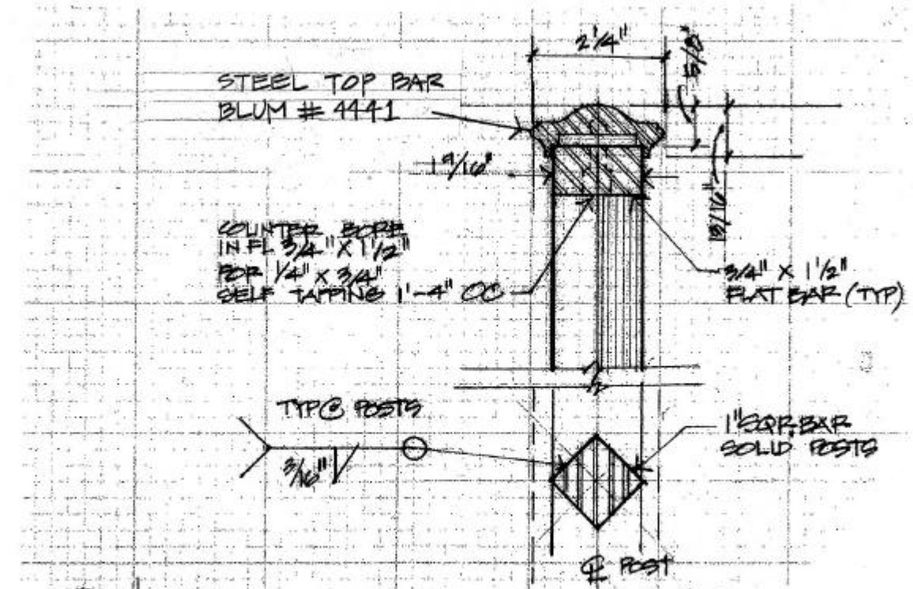

3 TYPICAL RAILING SECTION
HALF SIZE

HAND RAILING

MANUFACTURER: JULIUS BLUM

MODEL NAME: 4441 V (VOLUTE)
4441 (STEEL TOP BAR)

FINISH SPECIFICATIONS: PAINT TO MATCH PAINT CHIP FROM JHU PAINT SHOP (RAL-7022 UMBRAGREY)

JOHNS HOPKINS UNIVERSITY HOMEWOODCAMPUS BALTIMORE,MARYLAND

RUMMEL, KLEPPER & KAHL, LLP
ConsultingEngineers

AYERS SAINT GROSS
Architects&CampusPlanners

MAHAN RYKIEL ASSOCIATESINC.
Landscape Architects

MICHAEL VERGASON
Landscape Architects

Revisions

JHU: OPEN SPACE IMPLEMENTATION - PHASE I

HAND RAILING

August 2001

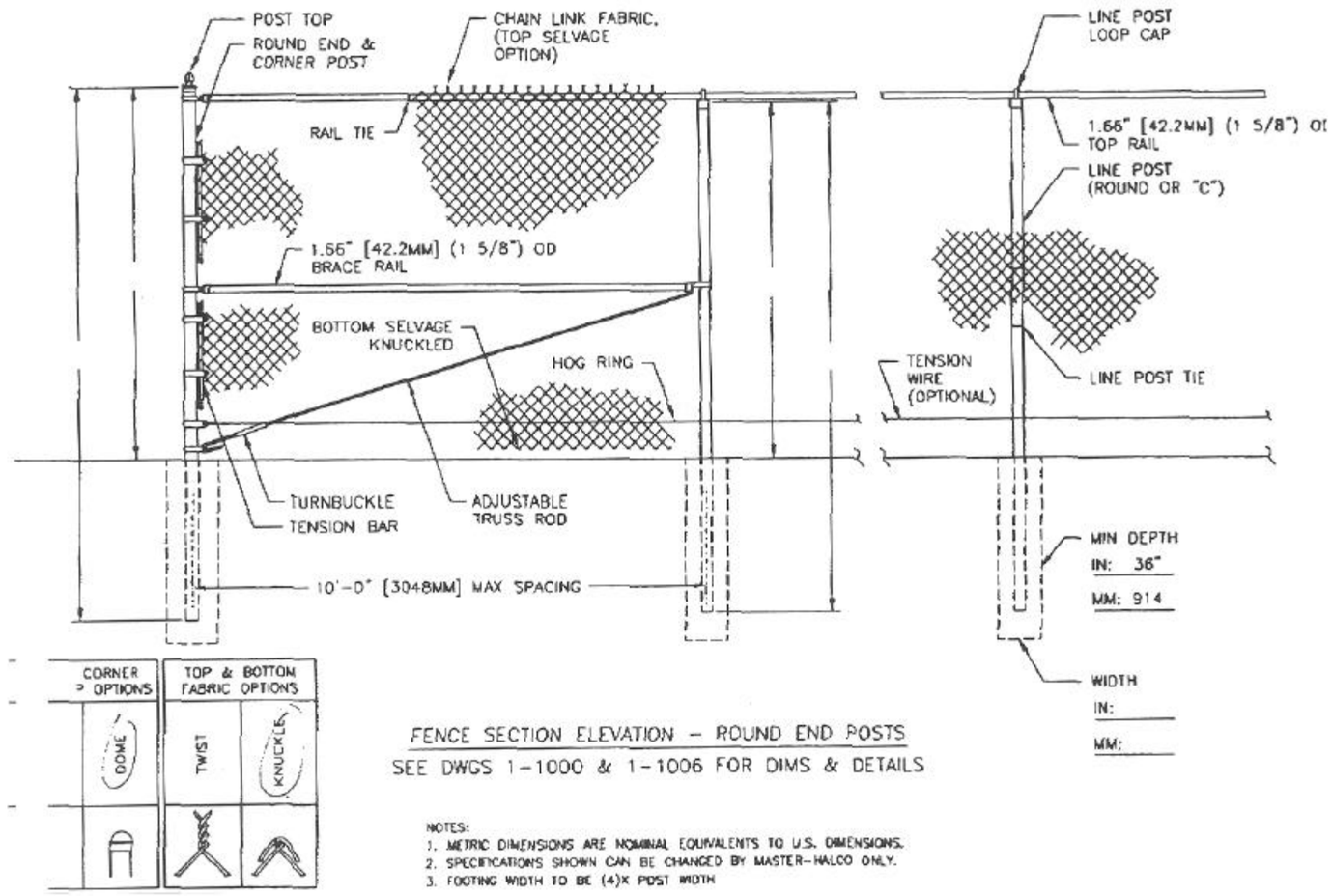

MANUFACTURER: SECURITY FENCE CO.

FINISH SPECIFICATIONS: BLACK VINYL COATED
1-3/4" DIAMOND MESH, 6 GAUGE

JOHNS HOPKINS UNIVERSITY
HOMEWOOD CAMPUS BALTIMORE, MARYLAND

RUMMEL, KLEPPER & KAHL, LLP
Consulting Engineers

AYERS SAINT GROSS
Architects & Campus Planners

MAHAN RYKIEL ASSOCIATES INC.
Landscape Architects

MICHAEL VERGASON
Landscape Architects

Revisions

JHU: OPEN SPACE IMPLEMENTATION - PHASE I

CHAIN LINK FENCE

August 2001

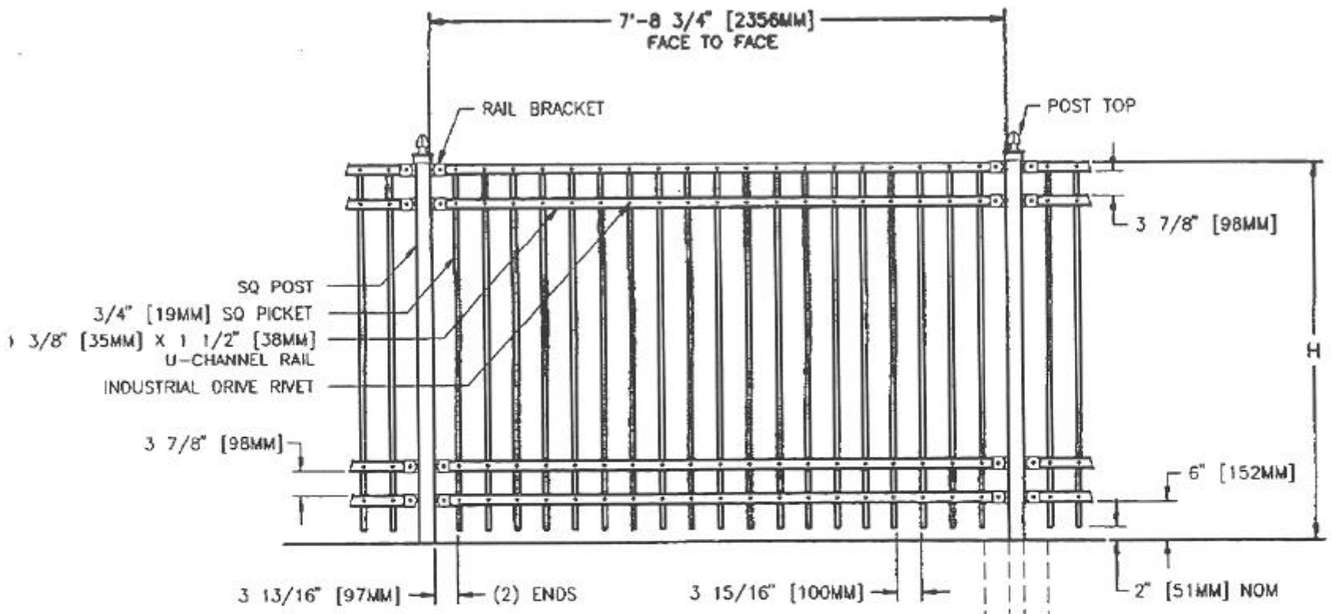

FENCE SECTION ELEVATION

SEE DWG 6-1220 FOR 1" PICKETS

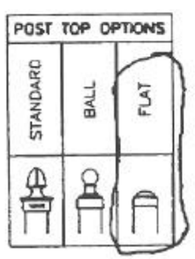

MIN DEPTH
IN: 36"
MM: 914

WIDTH
IN:
MM:

NOM HEIGHT (H)
3'-0" [914MM]
3'-6" [1067MM]
4'-0" [1219MM]
5'-0" [1524MM]
6'-0" [1829MM]
7'-0" [2134MM]
8'-0" [2438MM]

NOTES:
1. METRIC DIMENSIONS ARE NOMINAL EQUIVALENTS TO U.S. DIMENSIONS.
2. SPECIFICATIONS SHOWN CAN BE CHANGED BY MASTER-HALCO ONLY.
3. FOOTING WIDTH TO BE (4)X POST WIDTH.

MANUFACTURER: MONUMENTAL IRON WORKS

MODEL NAME: IMPERIAL FENCE STYLE C

FINISH SPECIFICATIONS: PAINT BLACK

NOTE: FENCE WAS NOT INSTALLED IN PHASE I

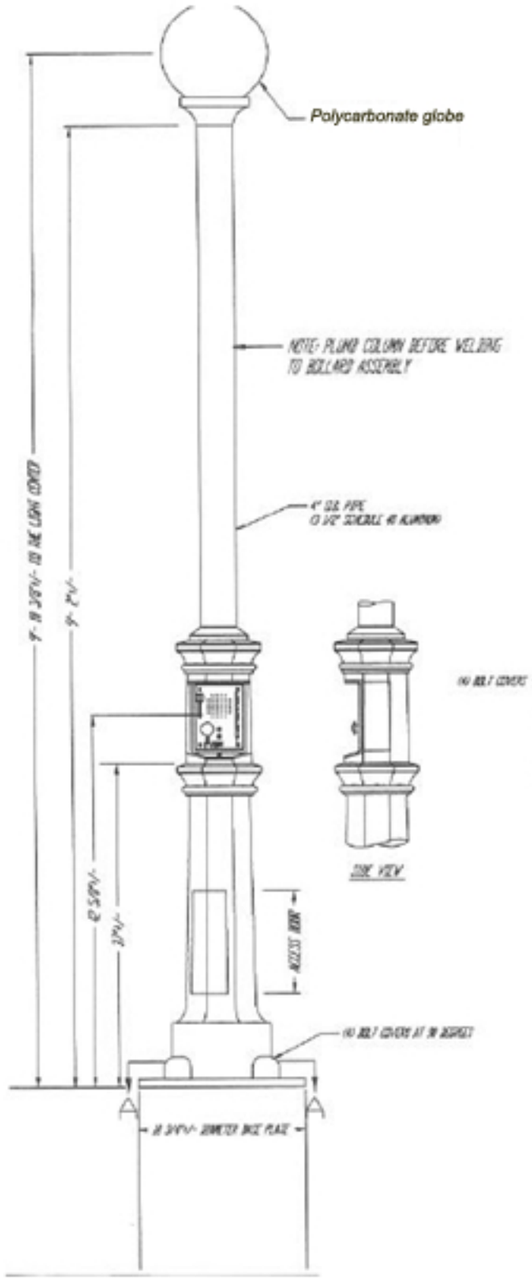

LUMINAIRE SPECIFICATIONS

STYLE:	WELLESLEY COLLEGE EMERGENCY
HEIGHT:	14 3/8"+/-
WIDTH:	12"+/- DIA.
MATERIAL:	CAST ALUMINUM
GLOBE:	16" translucent blue globe. Interior sandblasted.
FINISH:	PRIME PAINT
LAMPING:	INCANDESCENT LAMP BY OWNER
VOLTAGE:	120 VOLTS
SOCKET:	MEDIUM BASE
WIRE TYPE:	18 AWG, TYPE TFFN

EMERGENCY CALL BOX POST

STYLE:	NEWBURYPORT MODIFIED TO ACCOMMODATE EMERGENCY CALL BOX
HEIGHT:	9'- 2"+/-
LIGHT CENTER:	9'- 10 3/8"+/-
BASE:	18 1/2"+/- DIAMETER
MATERIAL:	
COLUMN:	NON-FLUTED ALUMINUM PIPE
BASE:	CAST ALUMINUM ALLOY 356.0 PER A.S.T.M. B 26-68
FINISH:	PRIME PAINT, SHERWIN WILLIAMS 2 PART RECOATABLE EPOXY PRIMER (ACTUS - PART 6 AND ACTUS - PART 10)
ACCESS DOOR:	LOCATED IN BASE AS SHOWN
GROUND STUD PROVISIONS:	DRILL AND TAP INSIDE WALL OF BASE OPPOSITE ACCESS DOOR TO ACCOMMODATE A 1/4"-20 GROUND STUD (GROUND STUD SUPPLIED BY OWNER)
ANCHOR BOLTS:	(4) 3/4" X 24" + 3" HOOK (FULLY GALVANIZED WITH 1 GALVANIZED NUT AND 1 GALVANIZED WASHER PER BOLT)
BOLT PROJECTION:	3" REQUIRED
FENCH:	2" CLOSE NIPPLE

QUANTITY:..... 9 REQUIRED

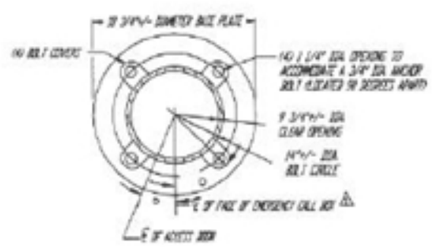

SECTION A-A

EMERGENCY CALL BOX POLE

EMERGENCY CALL BOX ENLARGEMENT

POLE MANUFACTURER: SPRING CITY ELECTRICAL MANUFACTURING CO.
MODEL NAME: NEWBURYPORT MODIFIED 9'-2" POST
(CONTACT JHU FOR ELECTRICAL COMPONENTS LIST)

FINISH SPECIFICATIONS: PAINT TO MATCH PAINT CHIP FROM JHU PAINT SHOP (RAL-7022 UMBRA GREY)

NOTE: POLE AND ELECTRICAL COMPONENTS ARRIVE IN SEPARATE PACKAGES. ASSEMBLY AND INSTALLATION BY CONTRACTOR INCLUDING SIREN, TELECOM AND POWER. JHU TO ADVISE CONTRACTOR AS NEEDED.

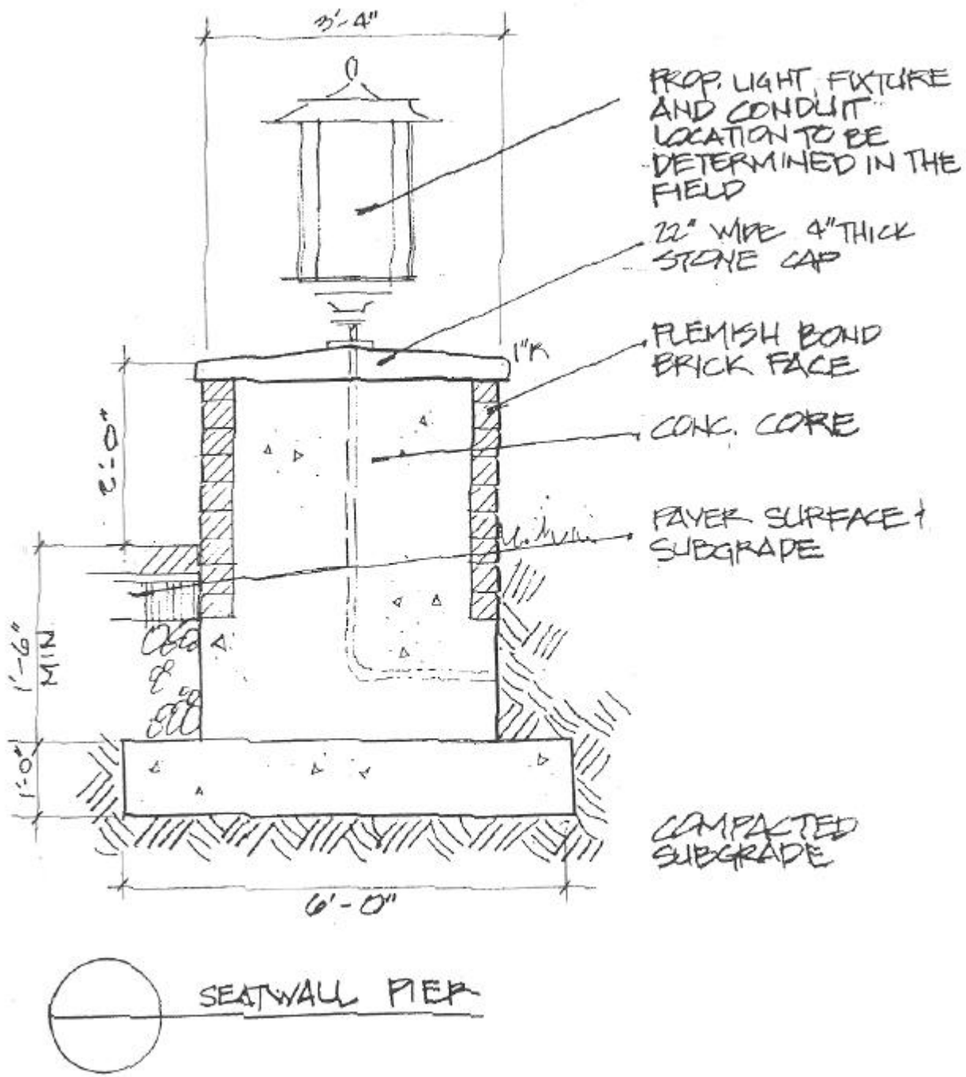

PIER MOUNTED LAMP FIXTURE

MANUFACTURER: SPRING CITY ELECTRICAL MANUFACTURING CO.

MODEL NAME: BRYANT PARK AC 400 PIER MOUNT, DWG PM-24514

FINISH SPECIFICATIONS: PAINT TO MATCH PAINT CHIP FROM JHU PAINT SHOP (RAL-7022 UMBRA GREY)

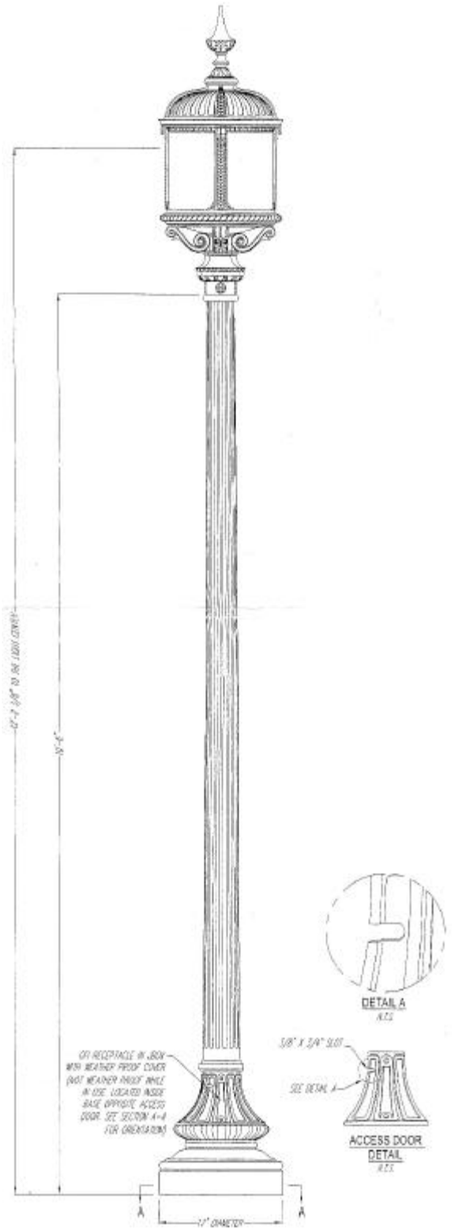

specs being updated for lamping (8/21/13)

LUMINAIRE SPECIFICATIONS

STYLE:	ETBP-M1
HEIGHT:	40 1/2"
WIDTH:	17 1/4" DIA.
MATERIAL:	CAST ALUMINUM
GLOBE:	OBSCURED ACRYLIC
FINISH:	PRIME PAINT THEN FINISH PAINT, SHERWIN WILLIAMS ACROLON - TO MATCH RAL ~~[illegible]~~ #7022
LAMPING:	
VOLTAGE:	
SOCKET:	
REFRACTOR:	

LAMP POST SPECIFICATIONS

STYLE:	WASHINGTON / VILLA 12P-M5
HEIGHT:	10'- 6"
LIGHT CENTER:	12'- 2 3/8"
BASE:	17" DIAMETER
MATERIAL:	1 PEICE, HEAVY WALL CAST IRON PER A.S.T.M. A 48-83 CLASS 30
FINISH:	PRIME PAINT THEN FINISH PAINT, SHERWIN WILLIAMS ACROLON - TO MATCH RAL ~~[illegible]~~ #7022
ACCESS DOOR:	LOCATED IN BASE SECURED WITH TAMPER PROOF HEX SOCKET SECURITY MACHINE SCREWS (TETHER DOOR TO POLE)
GROUND STUD PROVISIONS:	DRILL AND TAP INSIDE WALL OF BASE OPPOSITE ACCESS DOOR TO ACCOMODATE A 1/4"-20 GROUND STUD (STUD SUPPLIED BY OTHERS)
ANCHOR BOLTS:	(4) 3/4" DIA. X 24" + 3" HOOK (FULLY GALVANIZED WITH 1 GALVANIZED NUT AND 1 GALVANIZED WASHER PER BOLT)
BOLT PROJECTION:	3" REQUIRED
TENON:	2 3/8" DIA. X 6" HIGH (ABOVE DONUT)

PATHWAY LIGHT - POST

MANUFACTURER: SPRING CITY ELECTRICAL MANUFACTURING CO.

MODEL NAME: WASHINGTON / VILLA 12P -M5, DWG LP-24492

FINISH SPECIFICATIONS: PAINT TO MATCH PAINT CHIP FROM JHU PAINT SHOP (RAL-7022 UMBRA GREY)

LUMINAIRE SPECIFICATIONS

STYLE:	△ EFBP-M1
HEIGHT:	△ 43 1/2"
WIDTH:	17 1/4"
MATERIAL:	CAST ALUMINUM
CYLINDER:	CLEAR ACRYLIC
FINISH:	PRIME PAINT THEN FINISH PAINT, SHERWIN WILLIAMS ACROLON – PLEASE ADVISE COLOR

specs being updated for lamping (8/21/13)

TS)

PIER MOUNT SPECIFICATIONS

STYLE:	△ AC400
MATERIAL:	CAST ALUMINUM
FINISH:	PRIME PAINT THEN FINISH PAINT, SHERWIN WILLIAMS ACROLON – PLEASE ADVISE COLOR
△ ANCHOR BOLTS:	△ (4) 3/4" DIA. (SUPPLIED BY OTHERS)
BOLT PROJECTION:	2 1/2" REQUIRED
TENON:	△ 2 3/8" DIA. X 6" HIGH (TO ACCEPT LUMINAIRE)

QUANTITY..... 22 REQUIRED

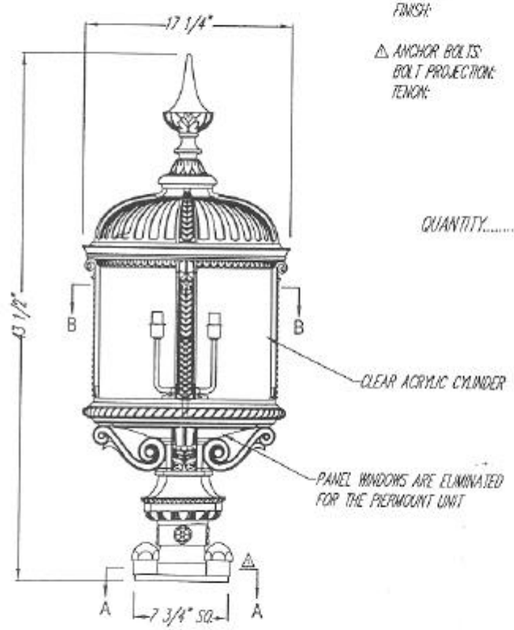

SECTION B-B
N.T.S.

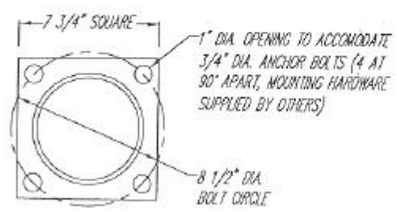

△ SECTION A-A
N.T.S.

PATHWAY LIGHT - FIXTURE

MANUFACTURER: SPRING CITY ELECTRICAL MANUFACTURING CO.

MODEL NAME: EFPB-M1, DWG PL-24514

FINISH SPECIFICATIONS: PAINT TO MATCH PAINT CHIP FROM JHU PAINT SHOP (RAL-7022 UMBRAGREY)

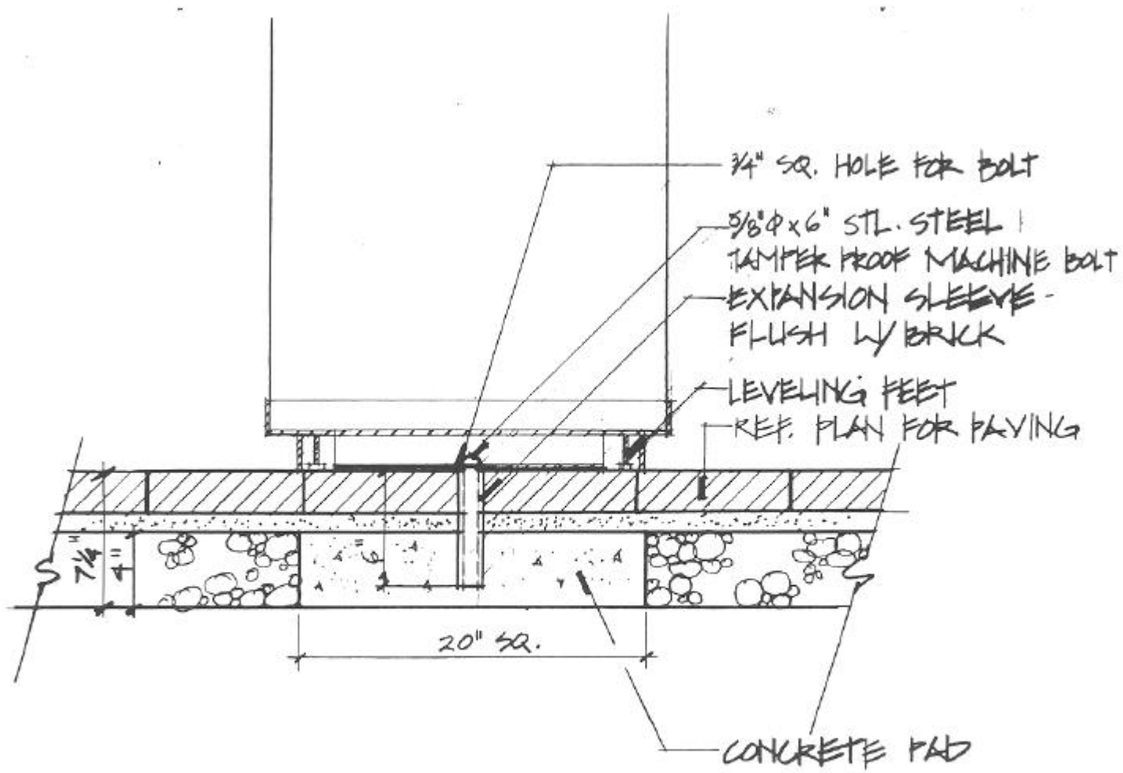

TRASH/RECYCLING RECEPTACLE MOUNTING MKA

1 1/2" = 1'-0" 11/3/00

TRASH RECEPTACLE

MANUFACTURER: VICTOR STANLEY

MODEL NAME: S-42 IRON SITES

FINISH SPECIFICATIONS: PAINT TO MATCH PAINT CHIP FROM JHU PAINT SHOP (RAL-7022 UMBRA GREY), ADD RECYCLING TEXT TO DESIGNATED RECEPTACLES

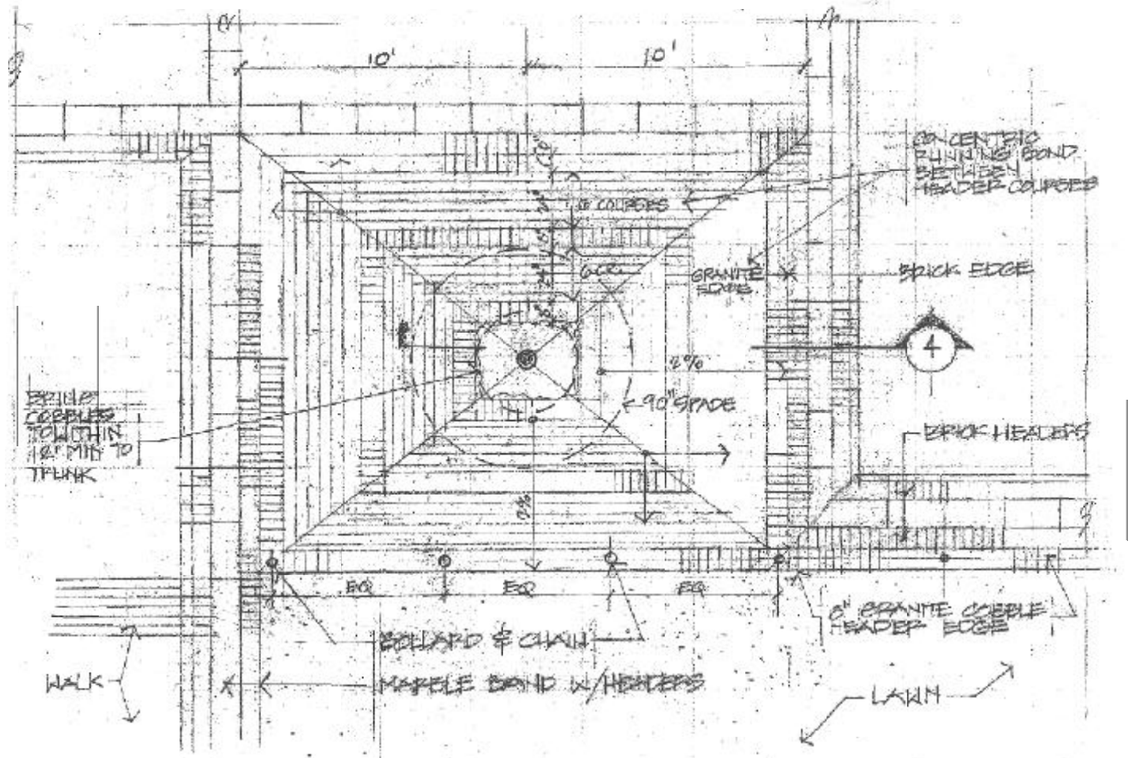

5 COBBLE PLANTER DETAILS
1/4" = 1'-0"
MMA
4.10.01

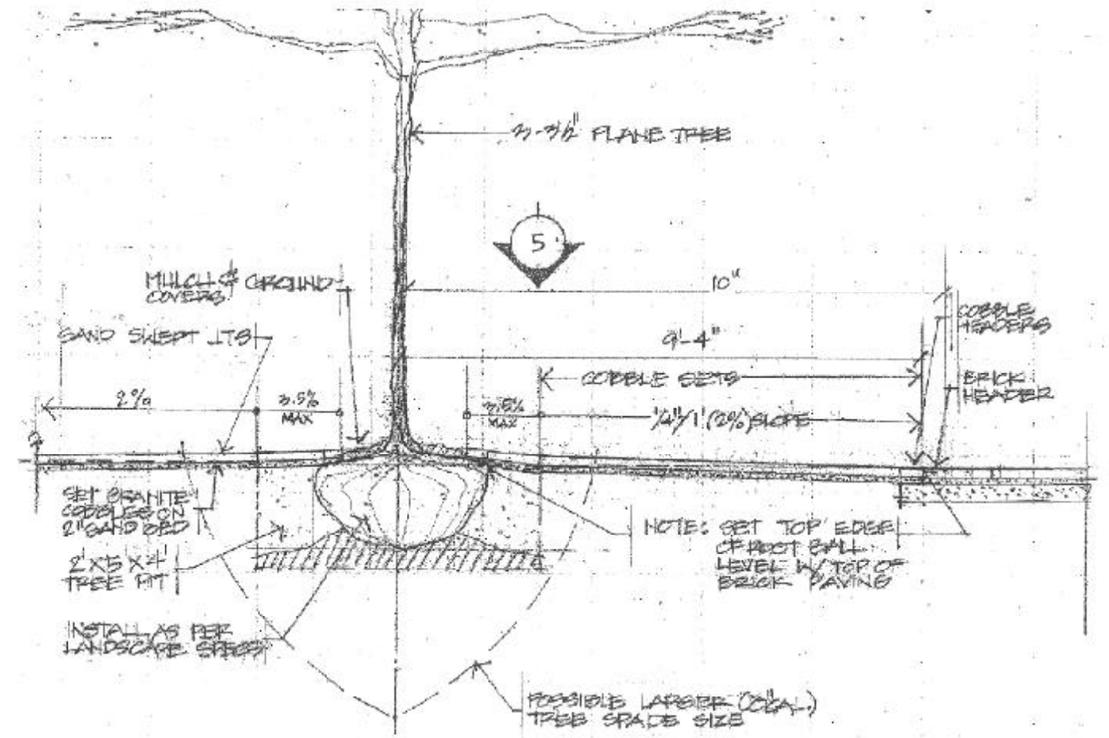

4 DETAIL COBBLE PAVER SECTION
1/2" = 1'-0"
MMA
4.10.01

TREE PIT

MANUFACTURER
(GRANITE COBBLES): NEW ENGLAND STONE, INC.

MODEL NAME: WOODBURY S

FINISH SPECIFICATIONS: 5 SIDES SPLIT FACE,
SAWN BOTTOM

JOHNS HOPKINS UNIVERSITY
HOMEWOOD CAMPUS
BALTIMORE, MARYLAND

RUMMEL, KLEPPER & KAHL, LLP
Consulting Engineers

AYERS SAINT GROSS
Architects & Campus Planners

MAHAN RYKIEL ASSOCIATES INC.
Landscape Architects

MICHAEL VERGASON
Landscape Architects

Revisions

JHU: OPEN SPACE IMPLEMENTATION - PHASE I

TREE PIT

August 2001

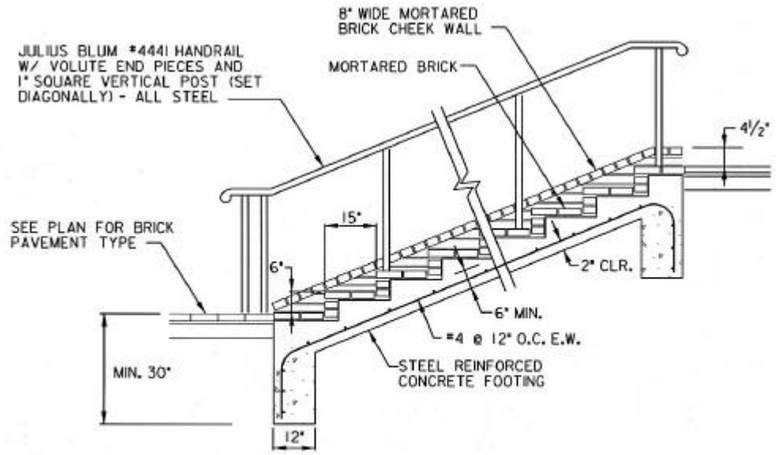

BRICK STAIR DETAIL
(NTS)

BRICK STAIRS

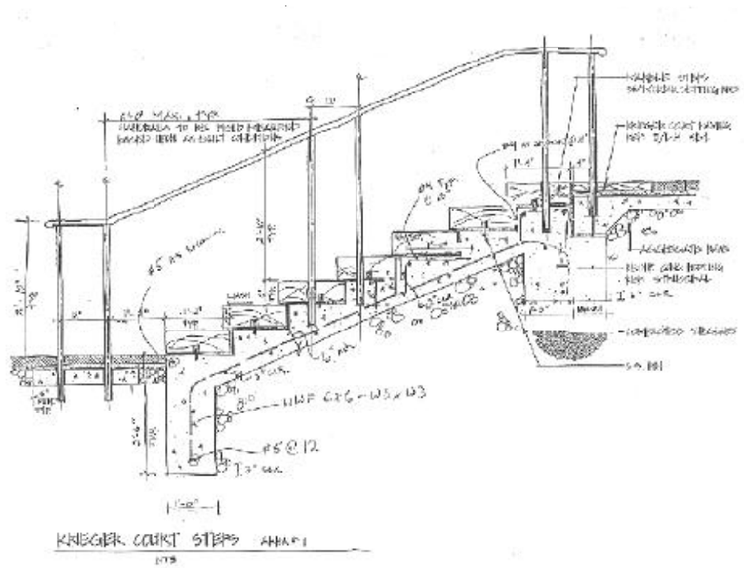

MARBLE STAIRS

JOHNS HOPKINS UNIVERSITY
HOMEWOOD CAMPUS BALTIMORE, MARYLAND

RUMMEL, KLEPPER & KAHL, LLP
Consulting Engineers

AYERS SAINT GROSS
Architects & Campus Planners

MAHAN RYKIEL ASSOCIATES INC.
Landscape Architects

MICHAEL VERGASON
Landscape Architects

Revisions

JHU: OPEN SPACE IMPLEMENTATION - PHASE I

STAIRS

August 2001

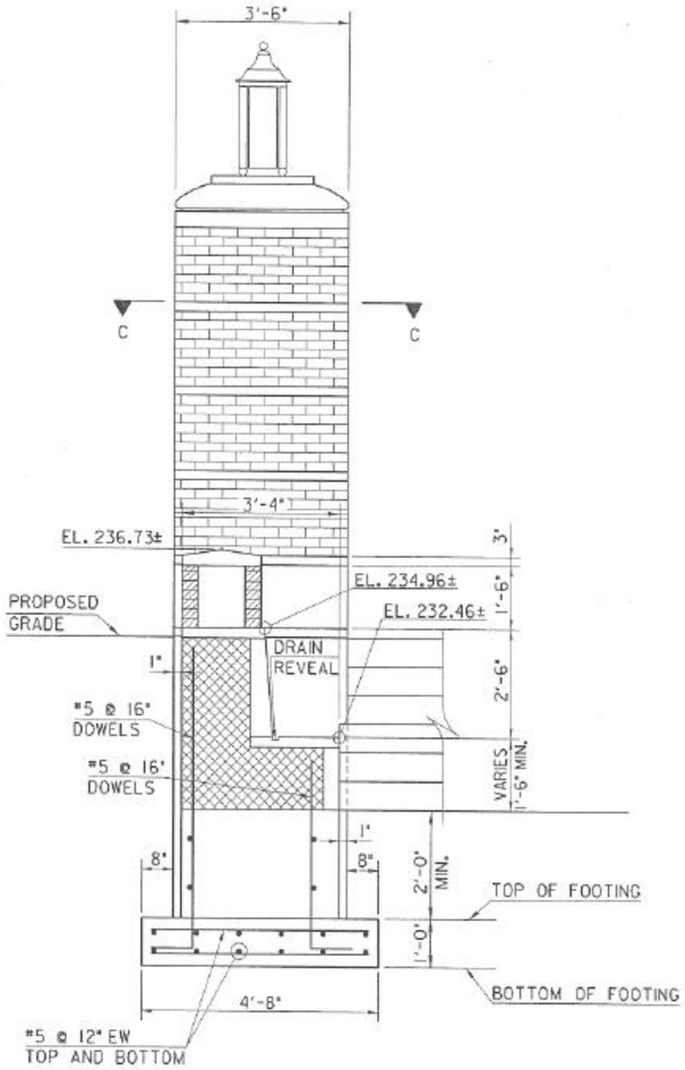

TYPICAL SECTION - SEAT WALL AND PIER
NOT TO SCALE

CONCRETE MASONRY UNIT WALL WITH BRICK/STONE FACING BOTH SIDES AND MARBLE/CUT STONE CAP

VIEW FROM LOWER QUAD

VIEW FROM UPPER QUAD

MARBLE SEAT WALL AND PIER

BRICK MANUFACTURER: REDLAND BRICK, INC.

MODEL NAME: GEORGIAN MODULAR

MARBLE MANUFACTURER: GAWET MARBLE & GRANITE, INC.

MODEL NAME: DANBY GREY

FINISH SPECIFICATIONS: EXTERIOR HONED (EXPOSED SURFACE ONLY)

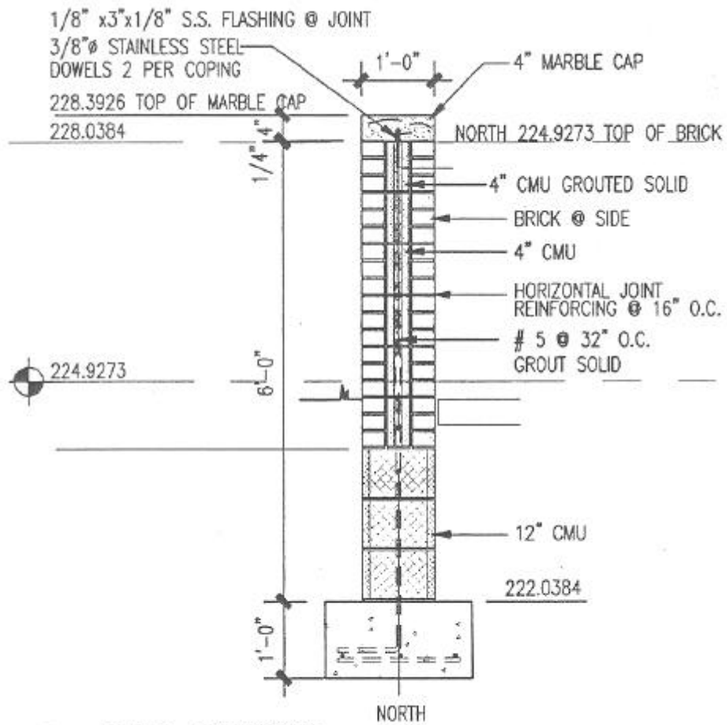

10 A1.01A WALL SECTIONS 1/2"=1/8"

PICTURE FROM HOMEWOOD HOUSE

PICTURE FROM CHARLES STREET

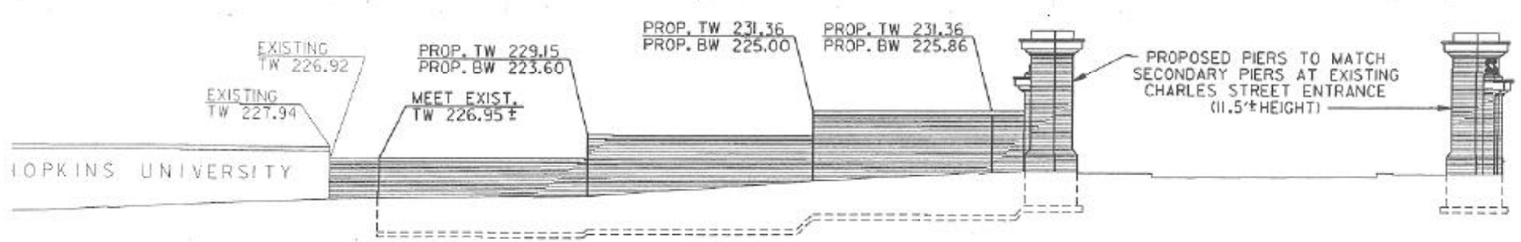

BRICK MANUFACTURER: BORAL

MODEL NAME: MODULAR KING WILLIAM

MARBLE
MANUFACTURER: GAWET MARBLE & GRANITE (QUARRY)
HILL GARTNER NATURAL STONE (MASON)

MODEL NAME: DANBY GREY

FINISH SPECIFICATIONS: EXTERIOR HONED (EXPOSED SURFACE ONLY)

JOHNS HOPKINS UNIVERSITY HOMEWOODCAMPUS BALTIMORE,MARYLAND

RUMMEL, KLEPPER & KAHL, LLP ConsultingEngineers

AYERS SAINT GROSS Architects&CampusPlanners

MAHAN RYKIEL ASSOCIATESINC. Landscape Architects

MICHAEL VERGASON Landscape Architects

Revisions

JHU: OPEN SPACE IMPLEMENTATION - PHASE I

JHU SIGN WALL AT CHARLES STREET

August 2001

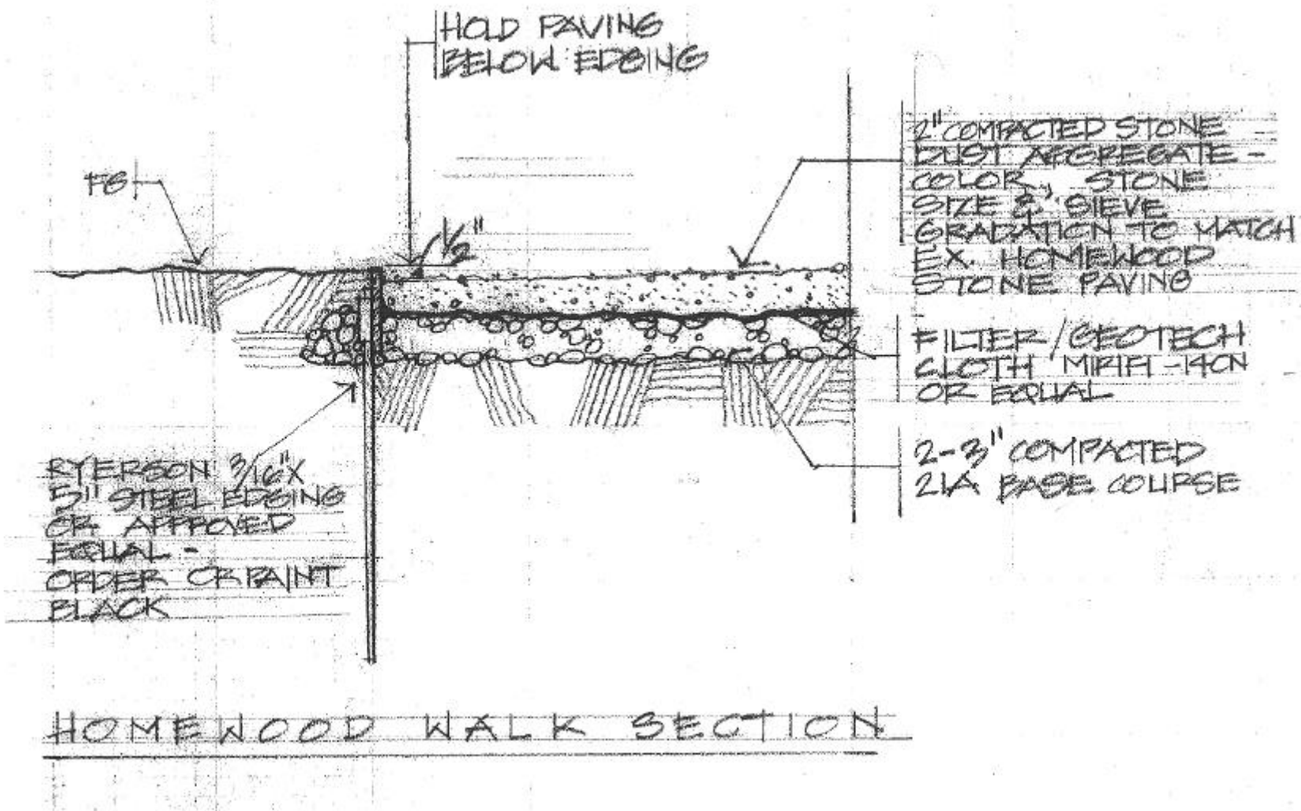

AGGREGATE WALK

MANUFACTURER: LUCK STONE

PRODUCT NAME (AGGREGATE): 50% CHAPEL HILLAGGREGATE FINES MIX
50% BERKLEY 3/8" PEA GRAVEL

PRODUCT NAME (BINDER/STABILIZER): TAN DURAPATH

NOTE: REFER TO PROJECT SPECIFICATIONS FOR ADDITIONAL PRODUCT DATAAND INSTALLATION REQUIREMENTS